Axelent X-Protect

Impact High

AXELENT AB • BOX 1
KÄVSJÖVÄGEN 17 • SE-335 73
HILLERSTORP • SWEDEN

TEL +46 (0)370-37 37 30
INFO@AXELENT.SE
WWW.AXELENT.COM

C-0017926-01| V2208_ X-Protect_impact_high _assembly_manual

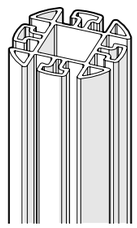
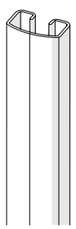

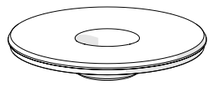
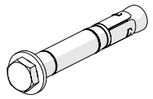

	Art. PT102-565	Art. PT103-309	Art. PT103-564	Art. PT116	Art. PT117-595 / Art. 10-9696	Art. PT105	Art. PT118	Art. 10-9695
BCE0-061-I100	1	3	1	1	1+1	1	1	4
BCM0-061-I100	1	2	2	1	1+1	1	1	4
BCC0-061-I100	1	2	2	1	1+1	1	1	4

CCS9-000-I100

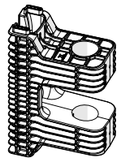
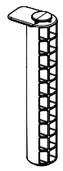

	Art. PT108	Art. PT109	Art. PT111
BCE0-061-I100	1	1	1
BCM0-061-I100	2	2	2
BCC0-061-I100	2	2	2

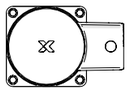

BCE0-061-I100

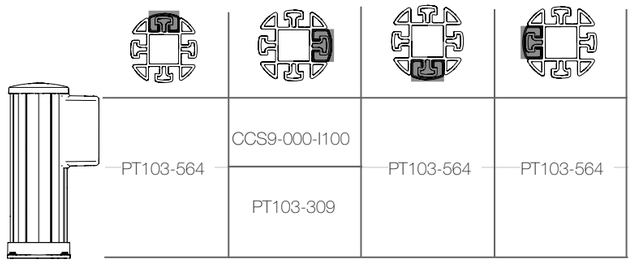

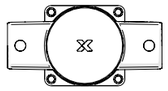

BCM0-061-I100

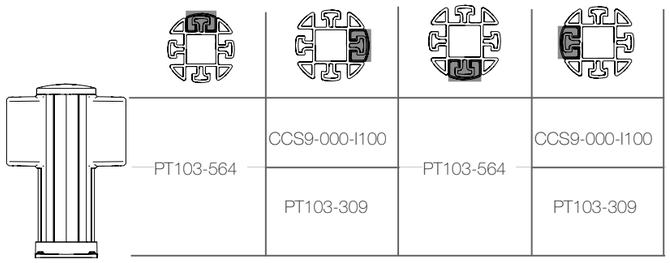

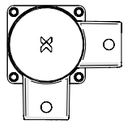

BCC0-061-I100

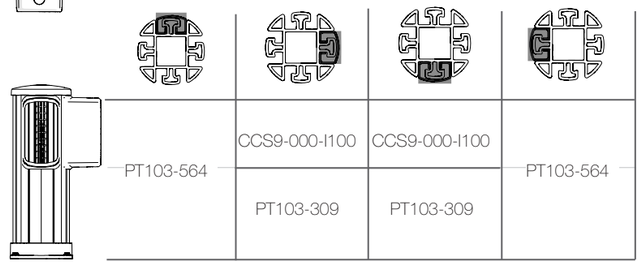

RCI1-XXX-XXXX
(RCI1-length-centre to centre)

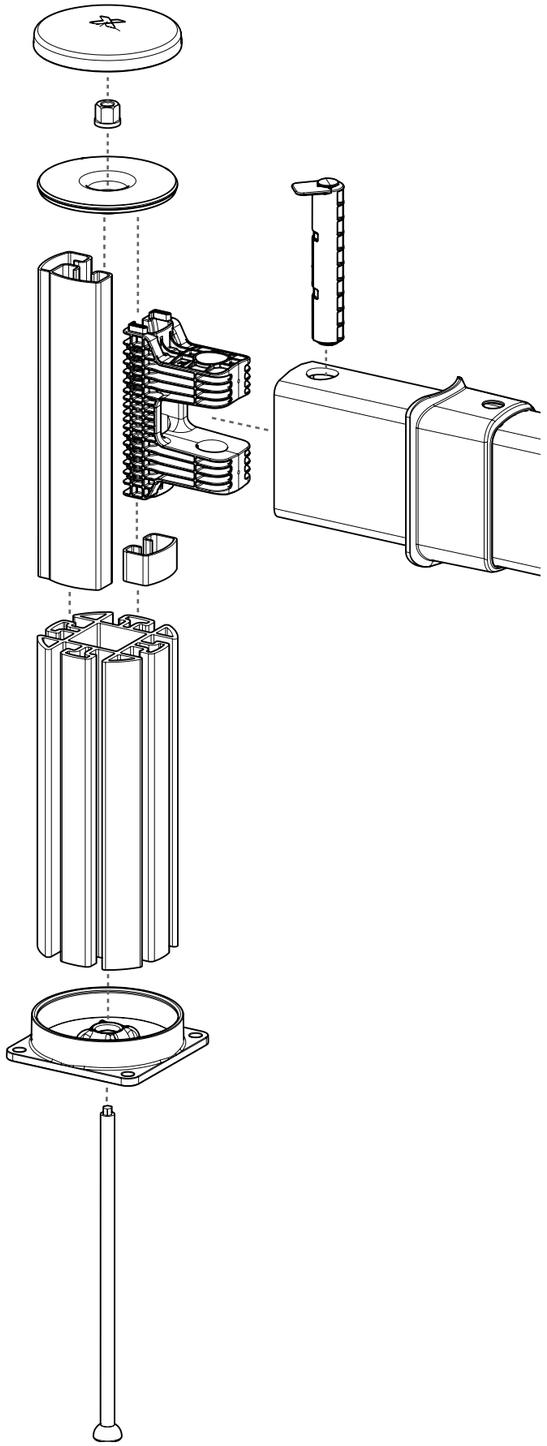

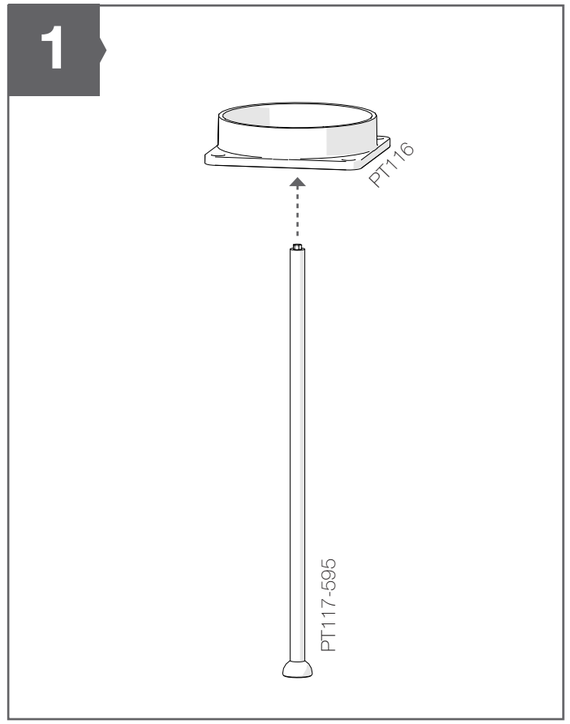
1
PT116
PT117-595

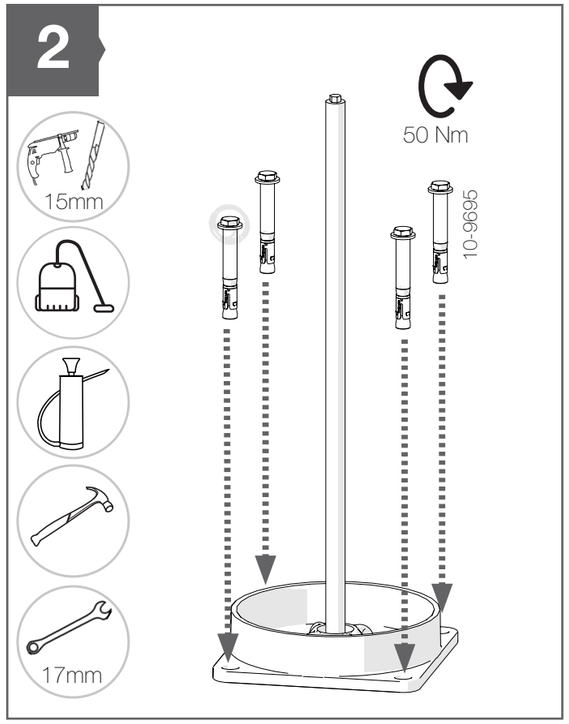
2
15mm
17mm
50 Nm
10-9695

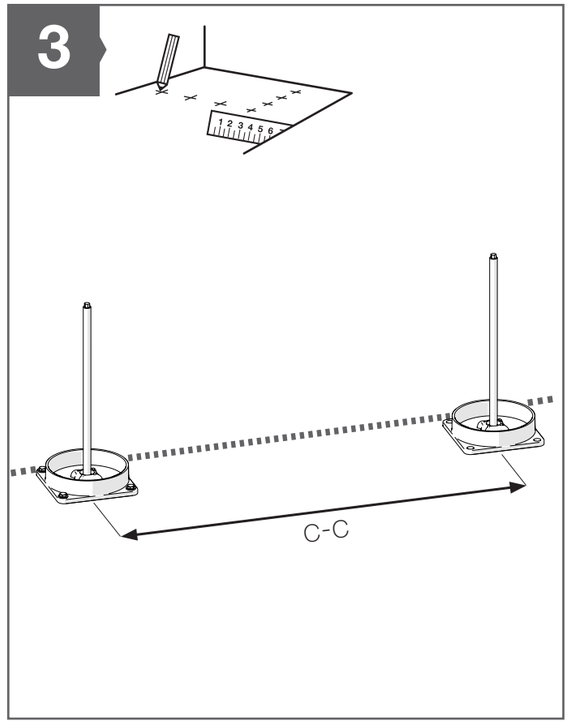
3
C-C

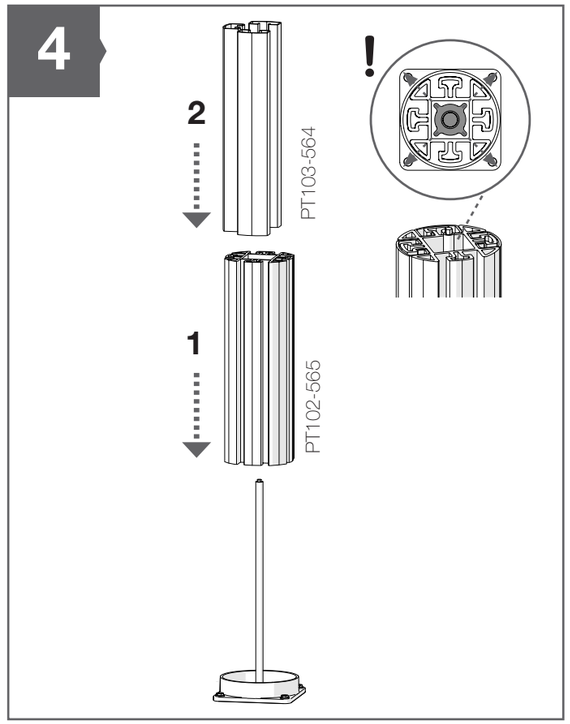
4
2
PT103-564
1
PT102-565
!

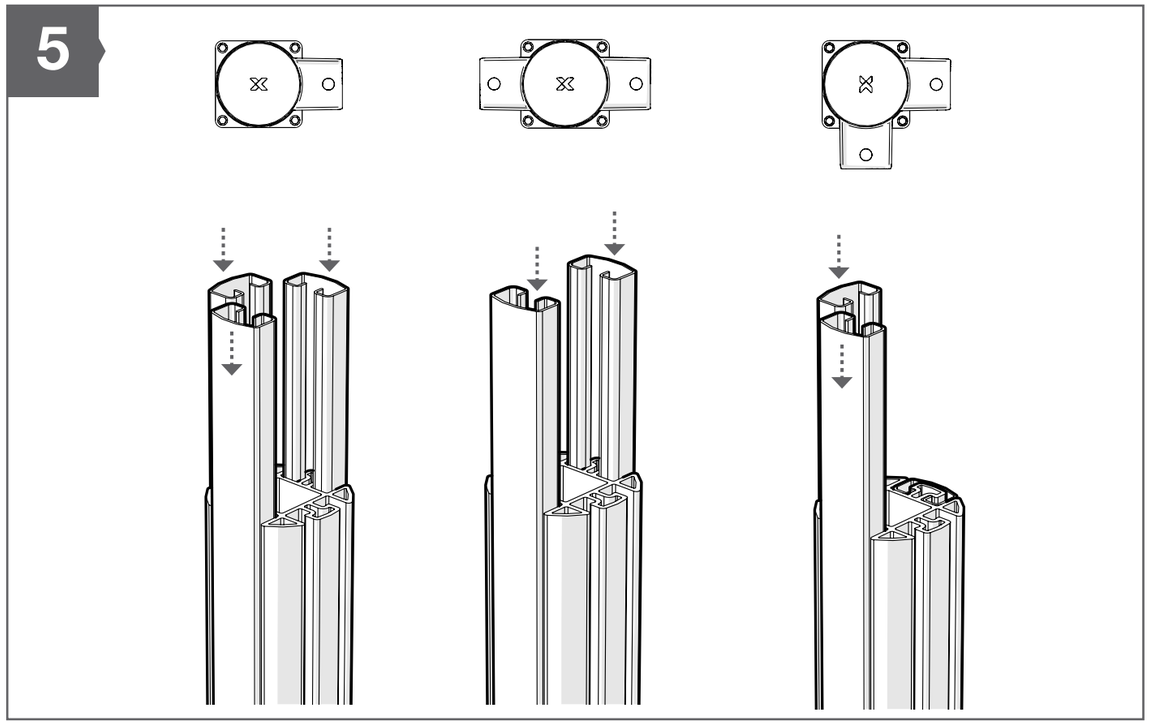
5

6

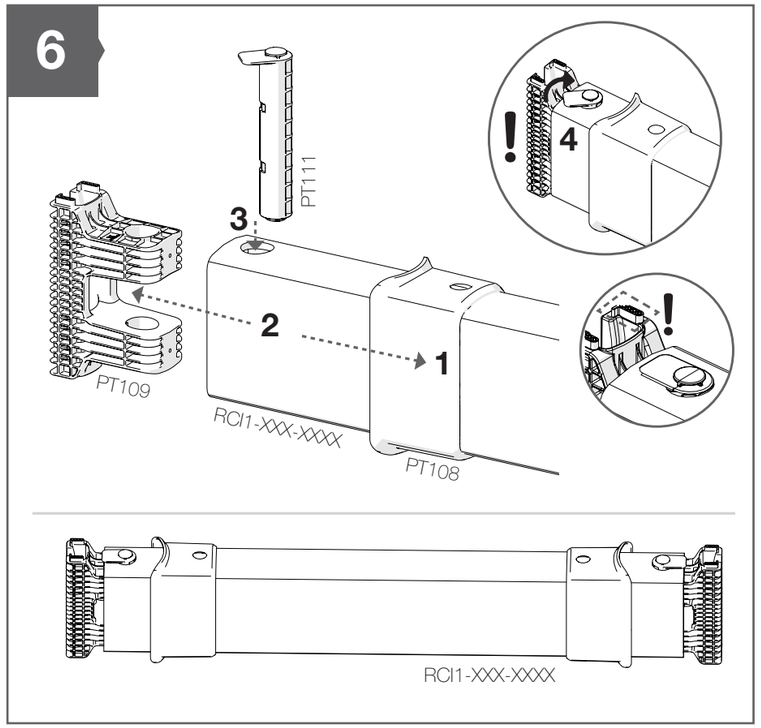
PT111
3
4
2
1
PT109
RCI1-XXX-XXXX
PT108
RCI1-XXX-XXXX

7

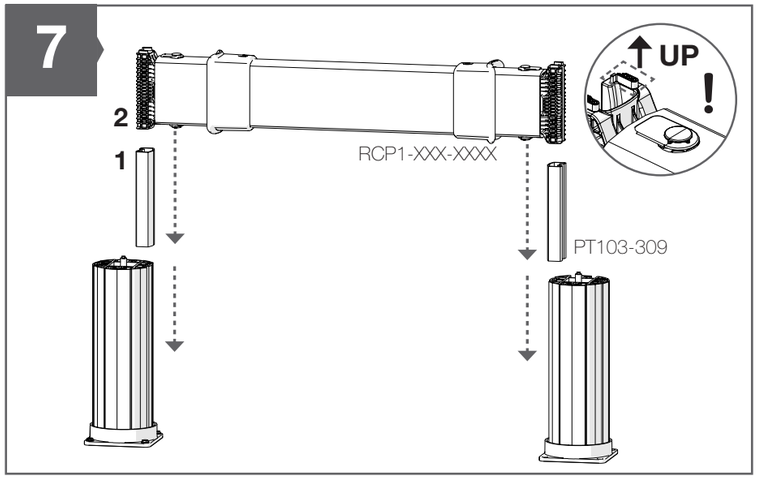
UP
2
1
RCP1-XXX-XXXX
PT103-309

8

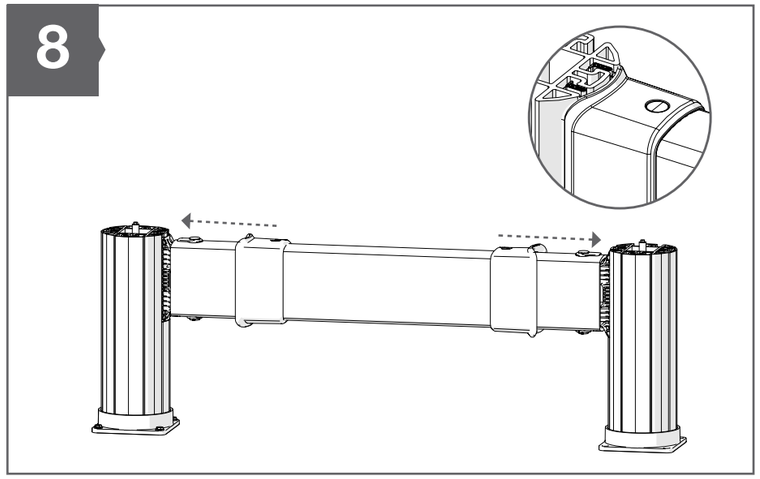

9

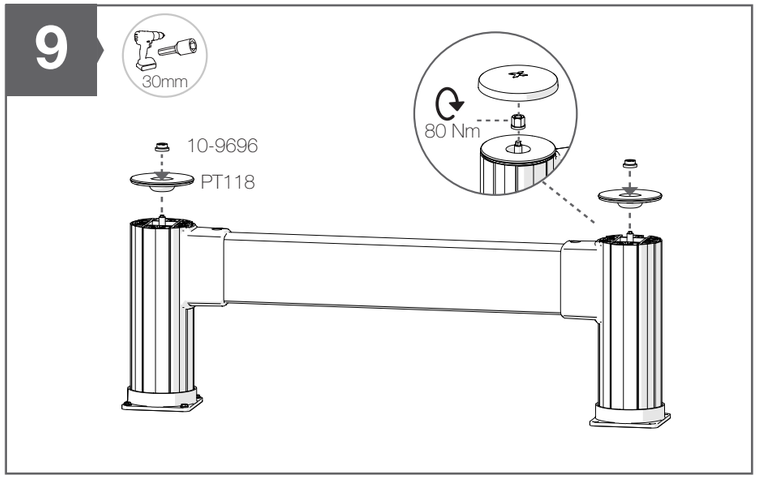
30mm
80 Nm
10-9696
PT118

10

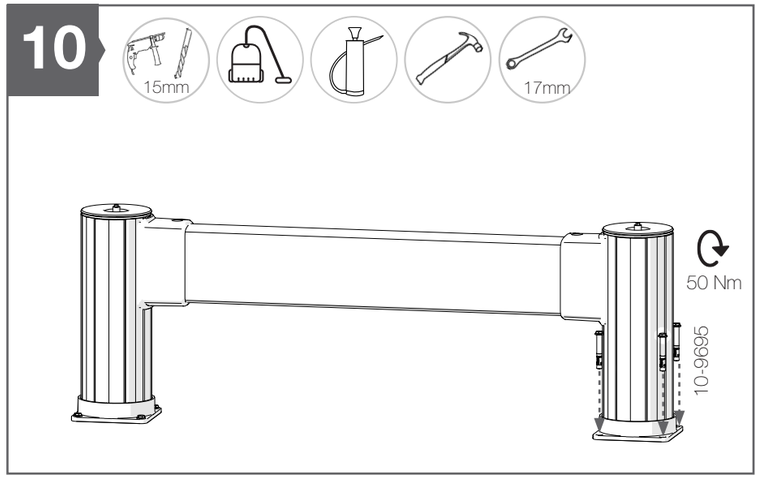
15mm
17mm
50 Nm
10-9695

11

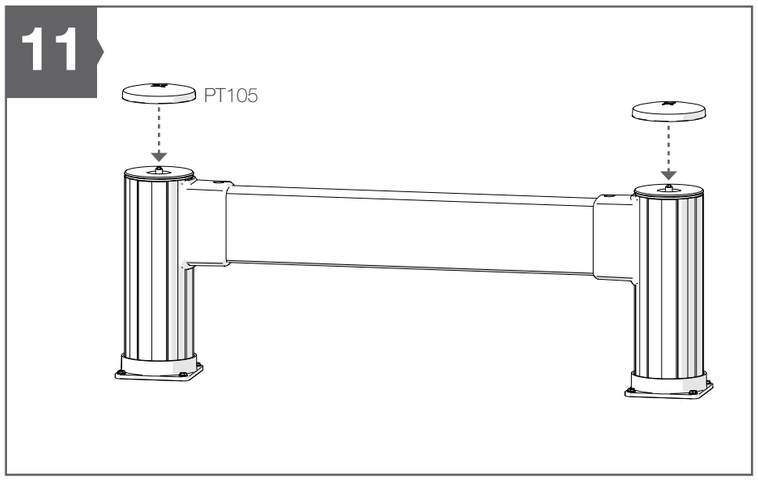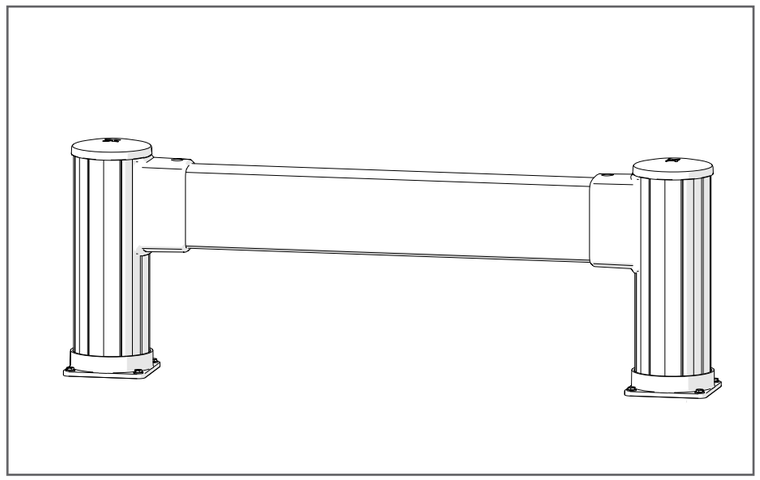
PT105