Axelent X-Protect

Double impact low

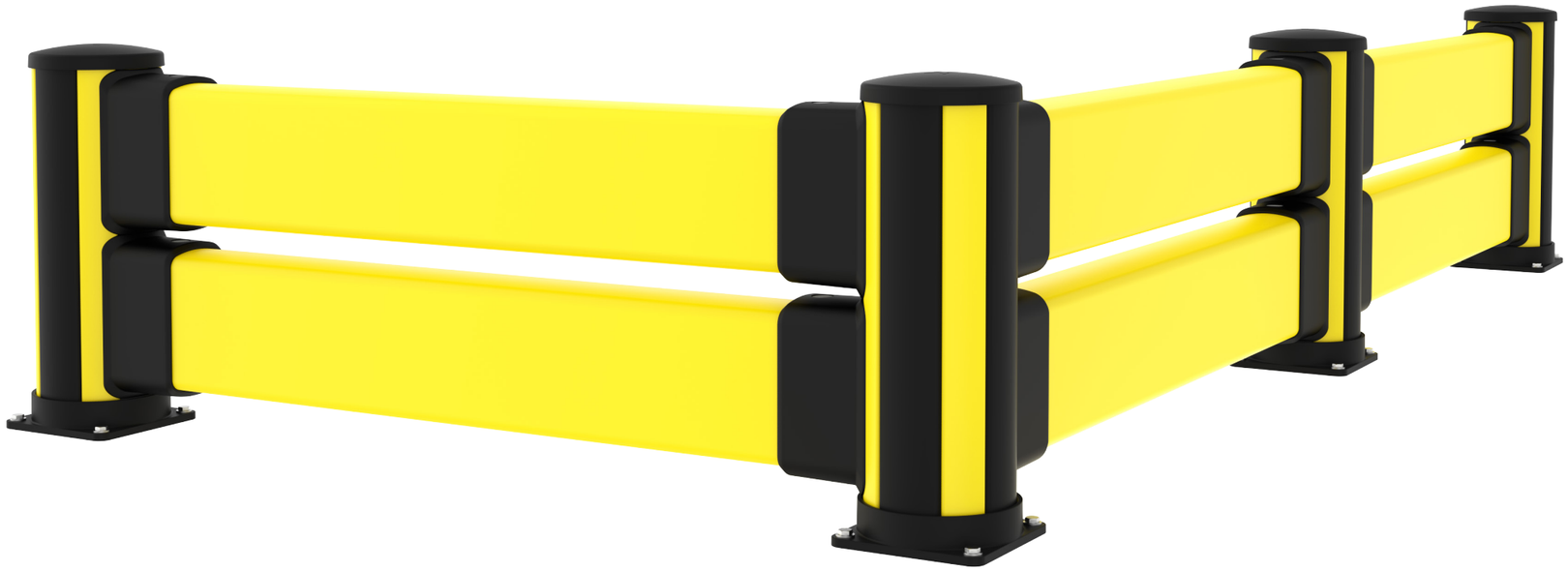

AXELENT AB • BOX 1
KÄVSJÖVÄGEN 17 • SE-335 73
HILLERSTORP • SWEDEN

TEL +46 (0)370-37 37 30
INFO@AXELENT.SE
WWW.AXELENT.COM

C-0017740-01| V2208_ X-Protect_Double_impact_low_assembly_manual

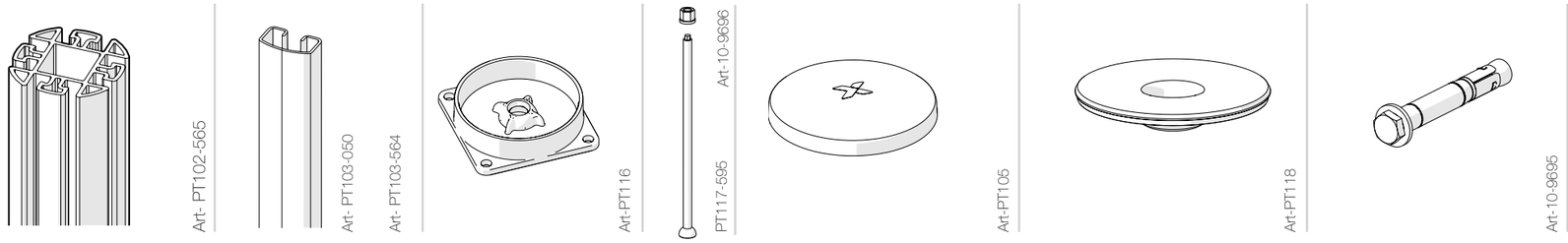

BCE0-061-I200	1	1	3	1	1+1	1	1	4
BCM0-061-I200	1	2	2	1	1+1	1	1	4
BCC0-061-I200	1	2	2	1	1+1	1	1	4

CCS9-000-I100

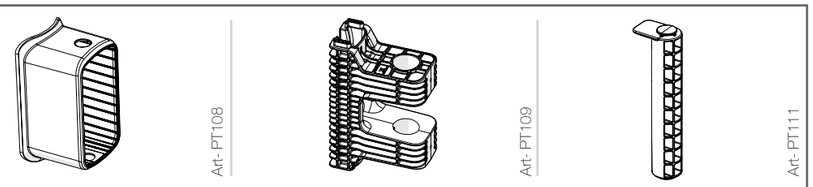

BCE0-061-I200	2	2	2
BCM0-061-I200	4	4	4
BCC0-061-I200	4	4	4

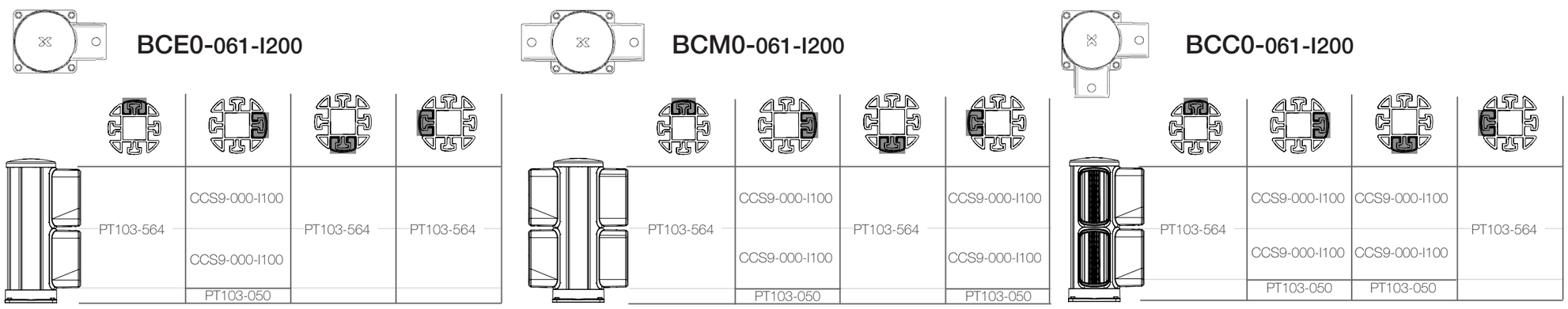

ECI1-XXX-XXXX
ECI1-length-centre to centre)

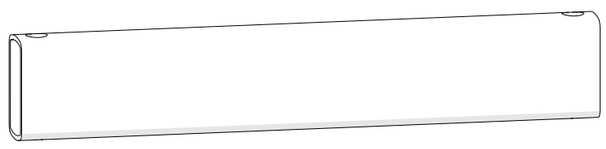

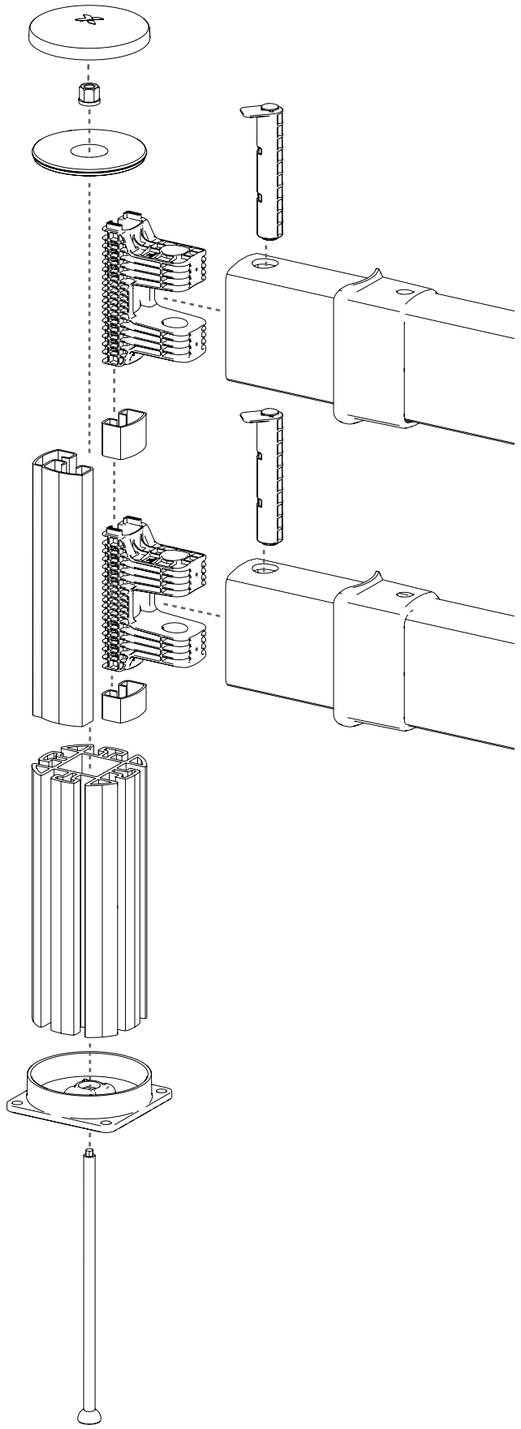

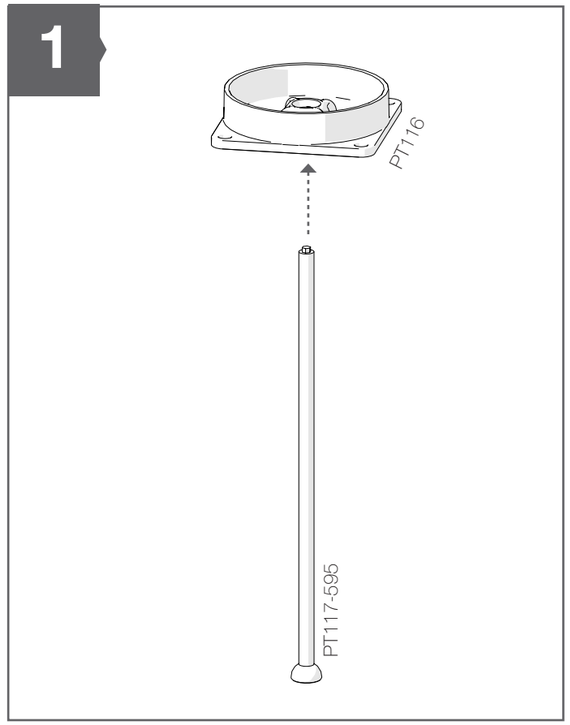
1
PT116
PT117-595

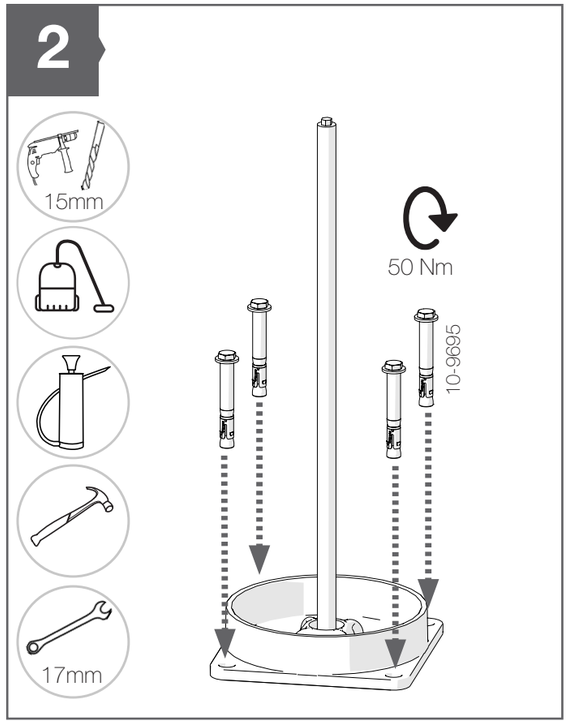
2
15mm
17mm
50 Nm
10-9695

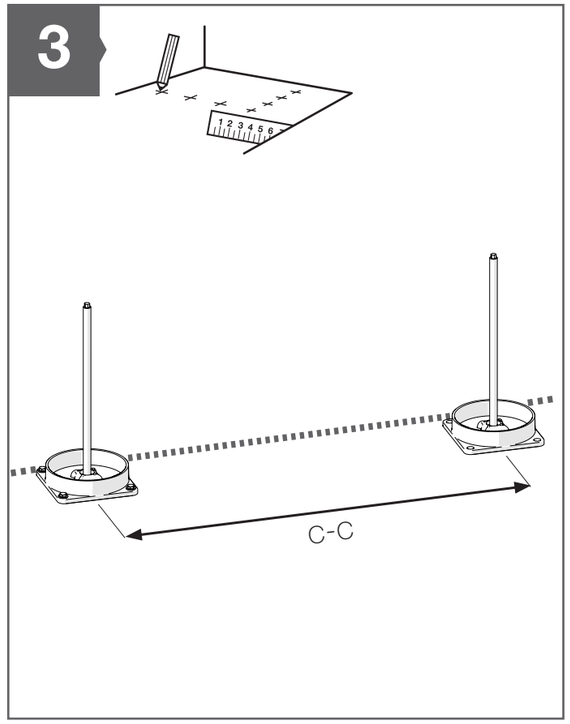
3
C-C

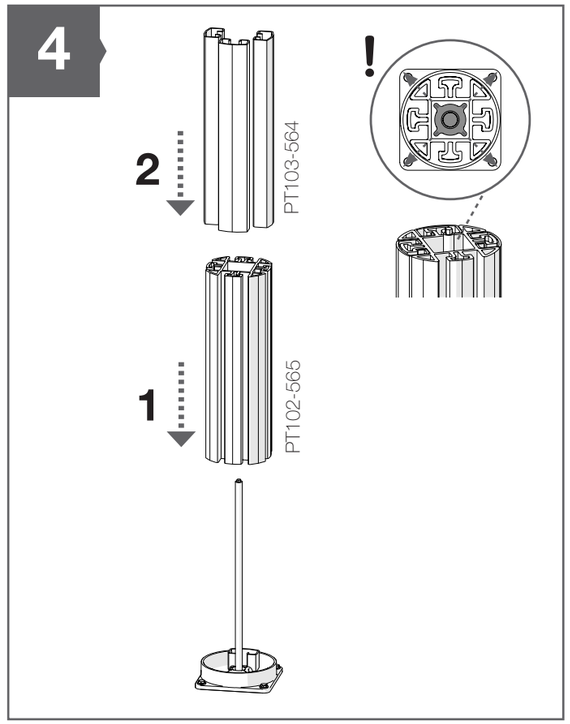
4
2
PT103-564
1
PT102-565
!

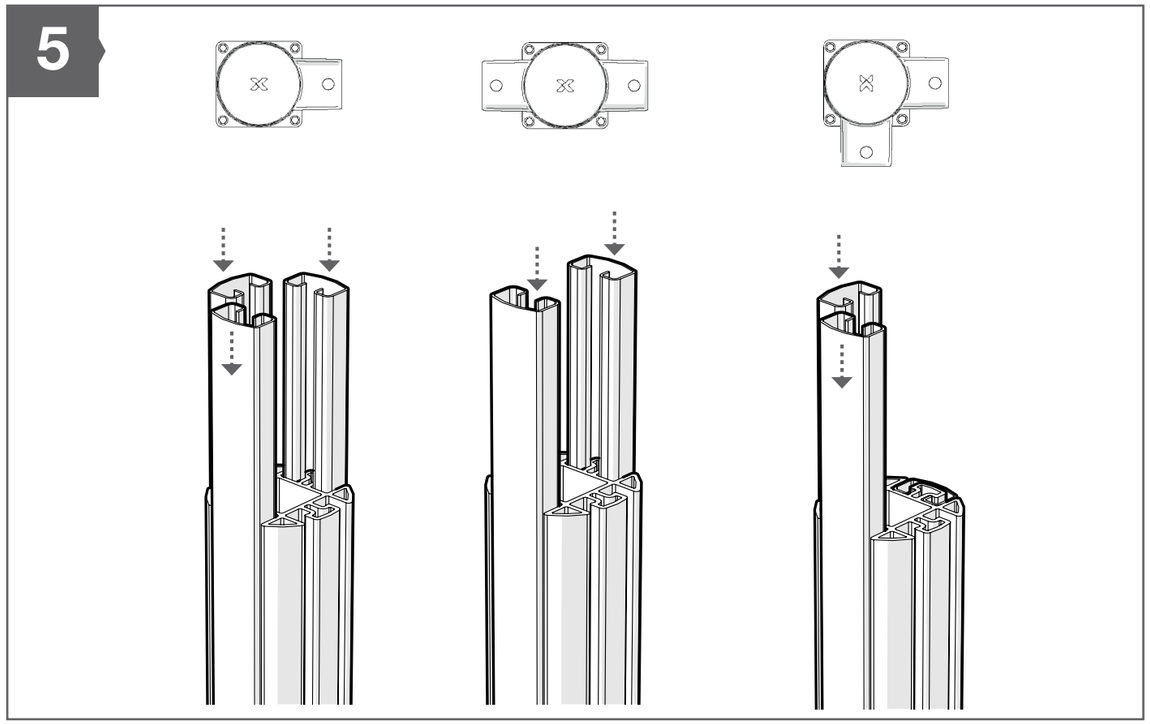
5

6

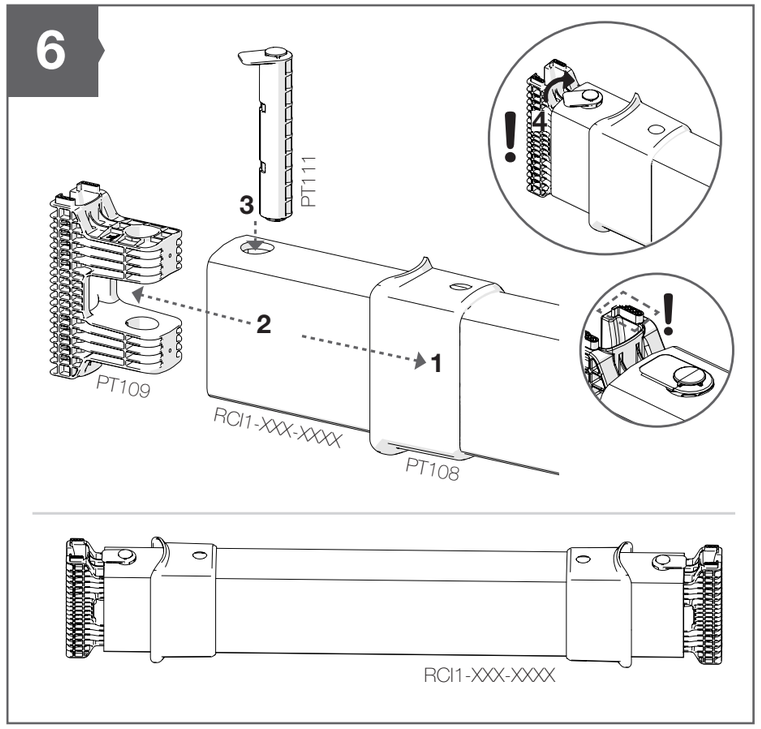
PT111
3
2
1
PT109
RCI1-XXX-XXXX
PT108
RCI1-XXX-XXXX

7

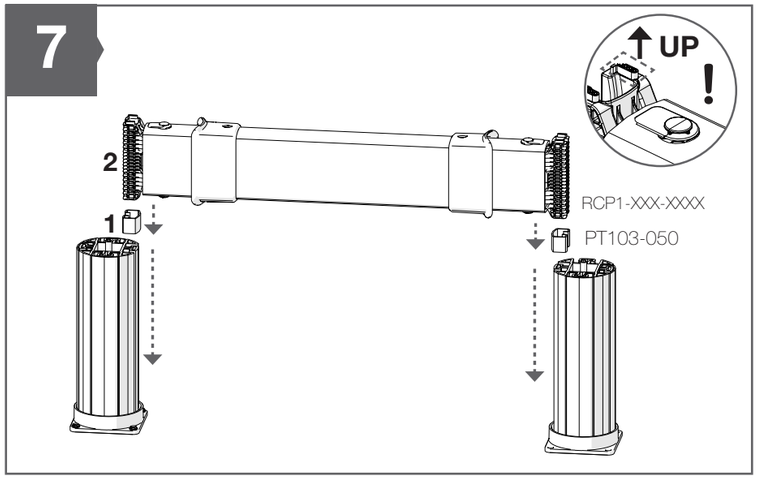
UP
!
2
1
RCP1-XXX-XXXX
PT103-050

8

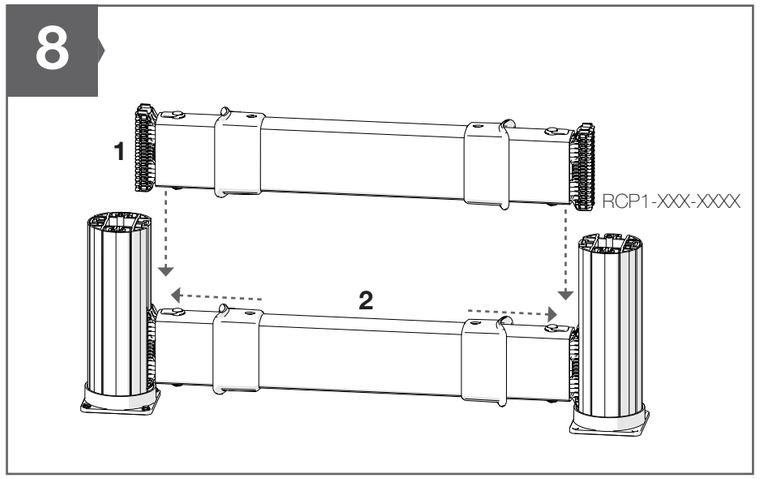
1
RCP1-XXX-XXXX
2

9

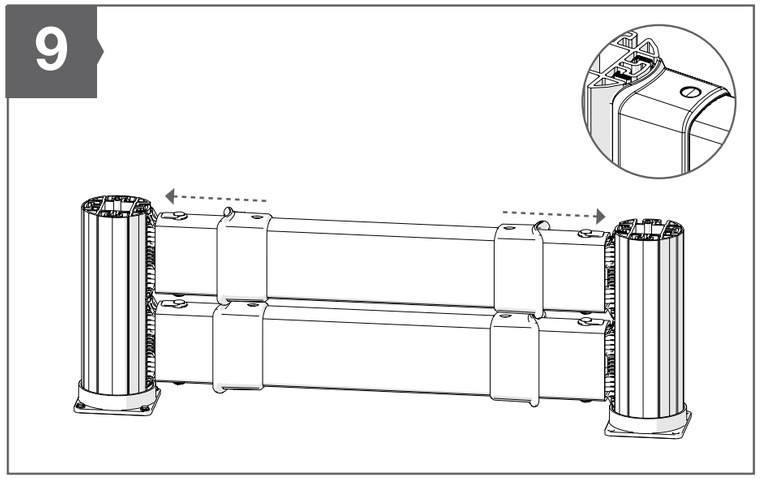

10

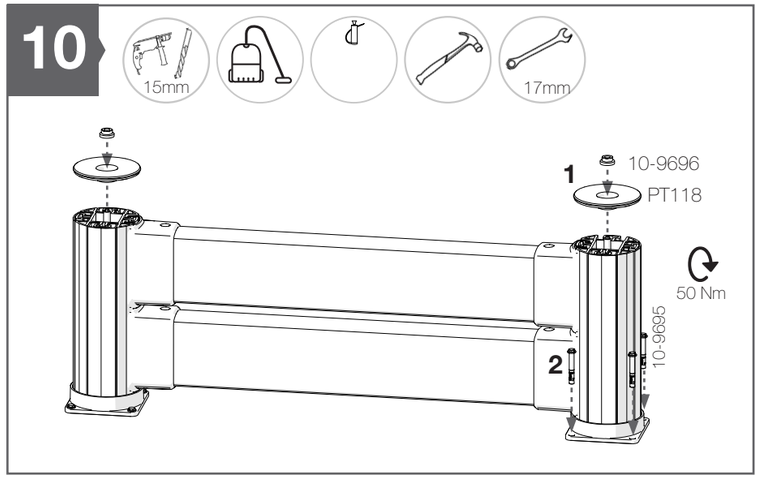
15mm
17mm
1
10-9696
PT118
50 Nm
2
10-9695

11

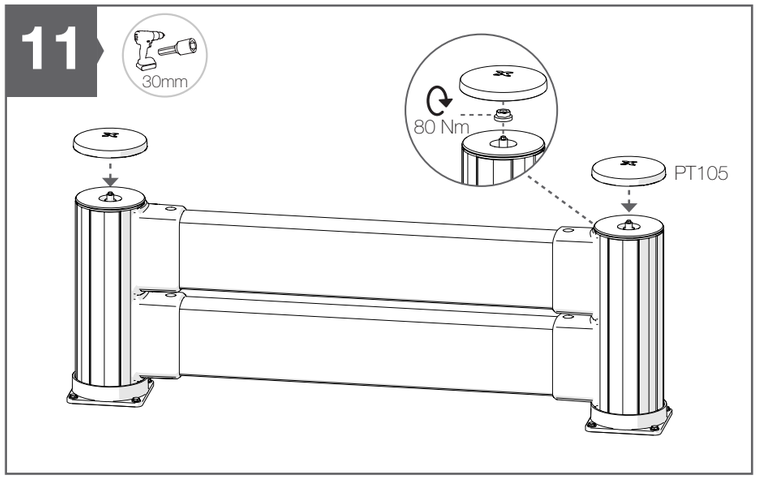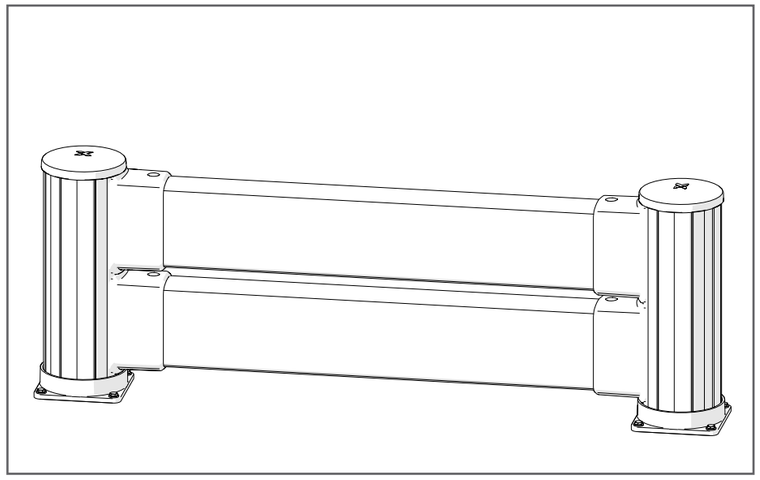
30mm
80 Nm
PT105