Axelent X-Protect

Double impact

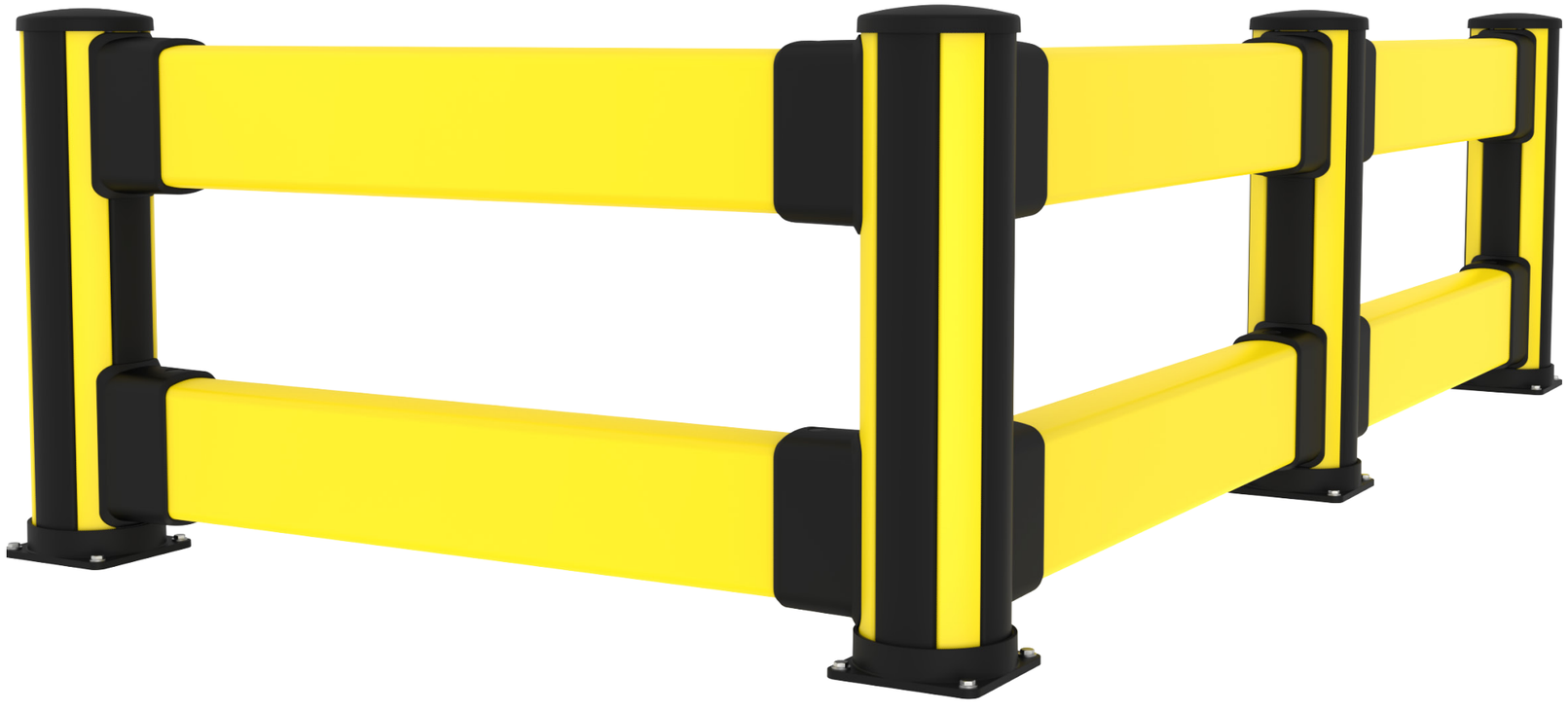

AXELENT AB • BOX 1
KÄVSJÖVÄGEN 17 • SE-335 73
HILLERSTORP • SWEDEN

TEL +46 (0)370-37 37 30
INFO@AXELENT.SE
WWW.AXELENT.COM

C-0017751-01| V2209_ X-Protect_double_impact _assembly_manual

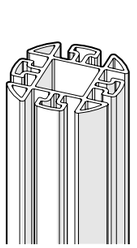

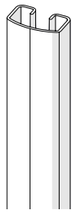

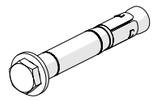

	Art. PT102-825	Art. PT103-050	Art. PT103-272	Art. PT103-824	Art. PT116	Art.10-9696 Art. PT117-855	Art. PT105	Art. PT118	Art. 10-9695
BCE0-087-I200	1	1	1	3	1+1	1	1	1	4
BCM0-087-I200	1	2	2	2	1+1	1	1	1	4
BCC0-087-I200	1	2	2	2	1+1	1	1	1	4

CCS9-000-I100

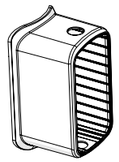

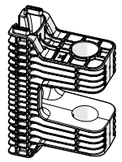

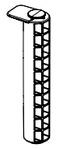

	Art. PT108	Art. PT109	Art. PT111
BCE0-087-I200	2	2	2
BCM0-087-I200	4	4	4
BCC0-087-I200	4	4	4

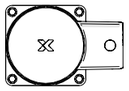

BCE0-087-I200

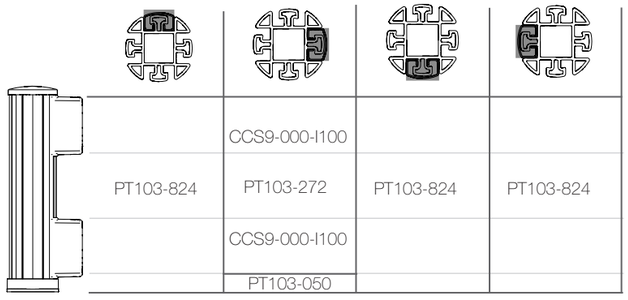

BCM0-087-I200

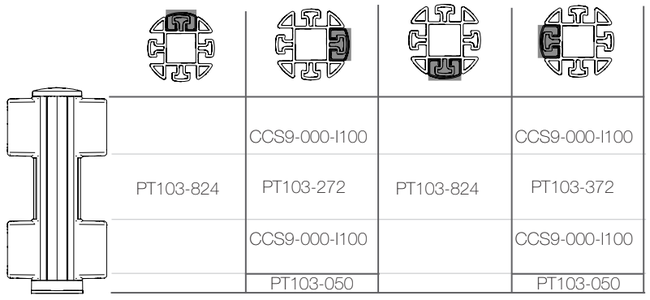

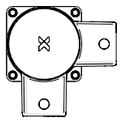

BCC0-087-I200

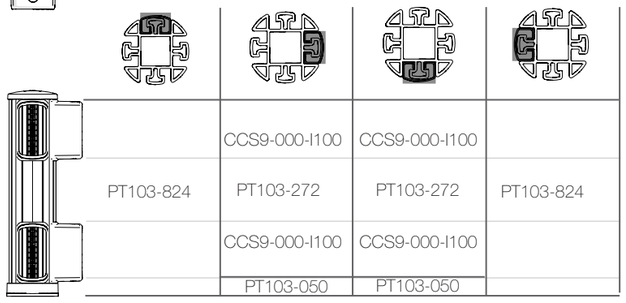

RCI1-XXX-XXXX
(RCI1-length-centre to centre)

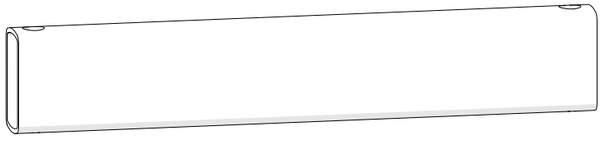

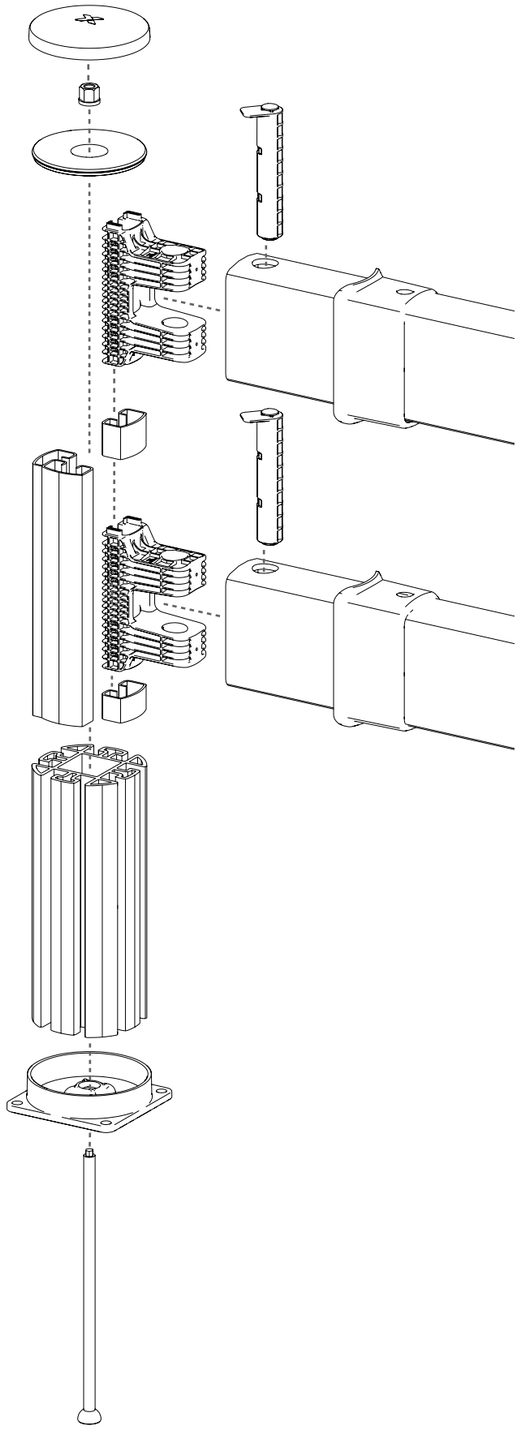

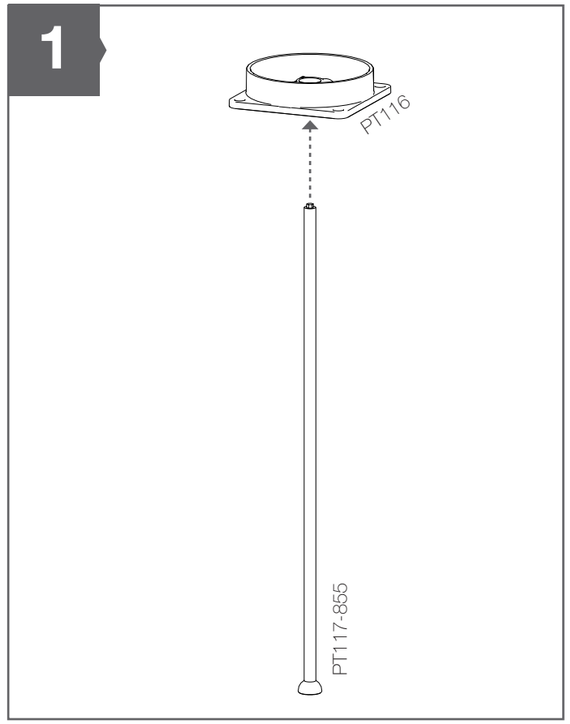
1
PT116
PT117-855

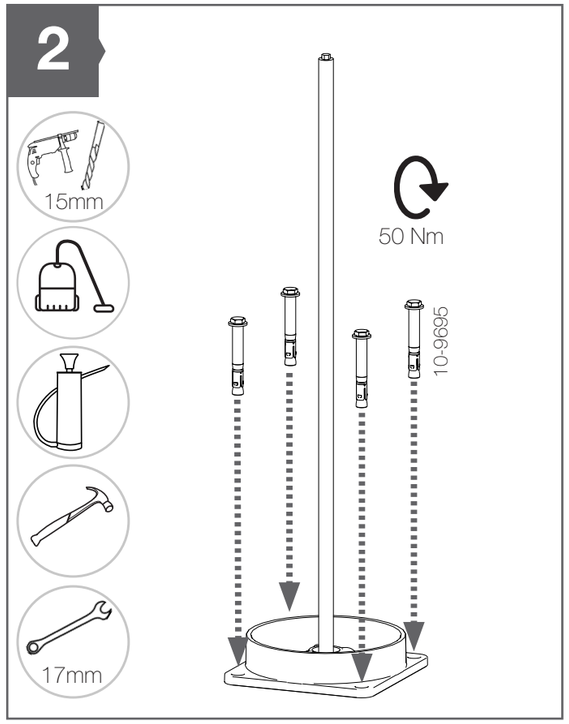
2
15mm
17mm
50 Nm
10-9695

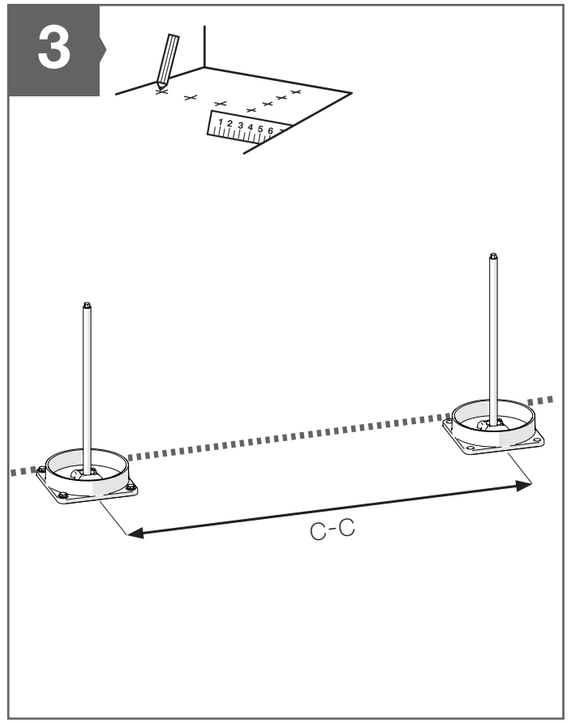
3
C-C

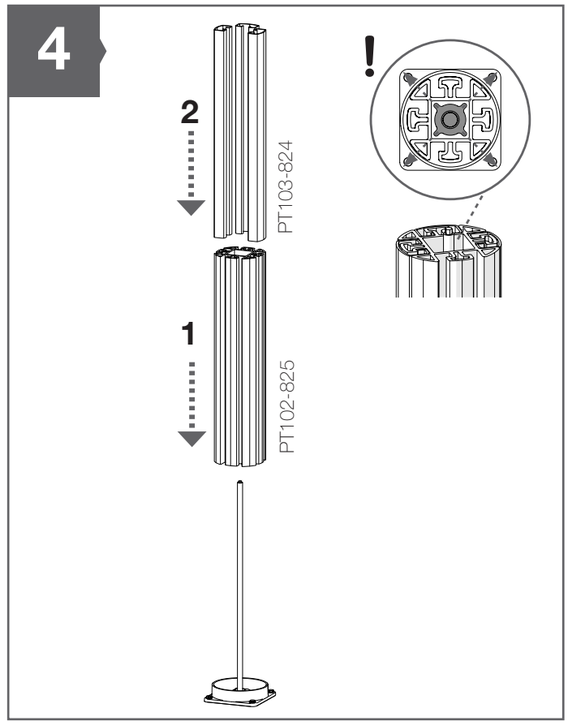
4
2
PT103-824
1
PT102-825
!

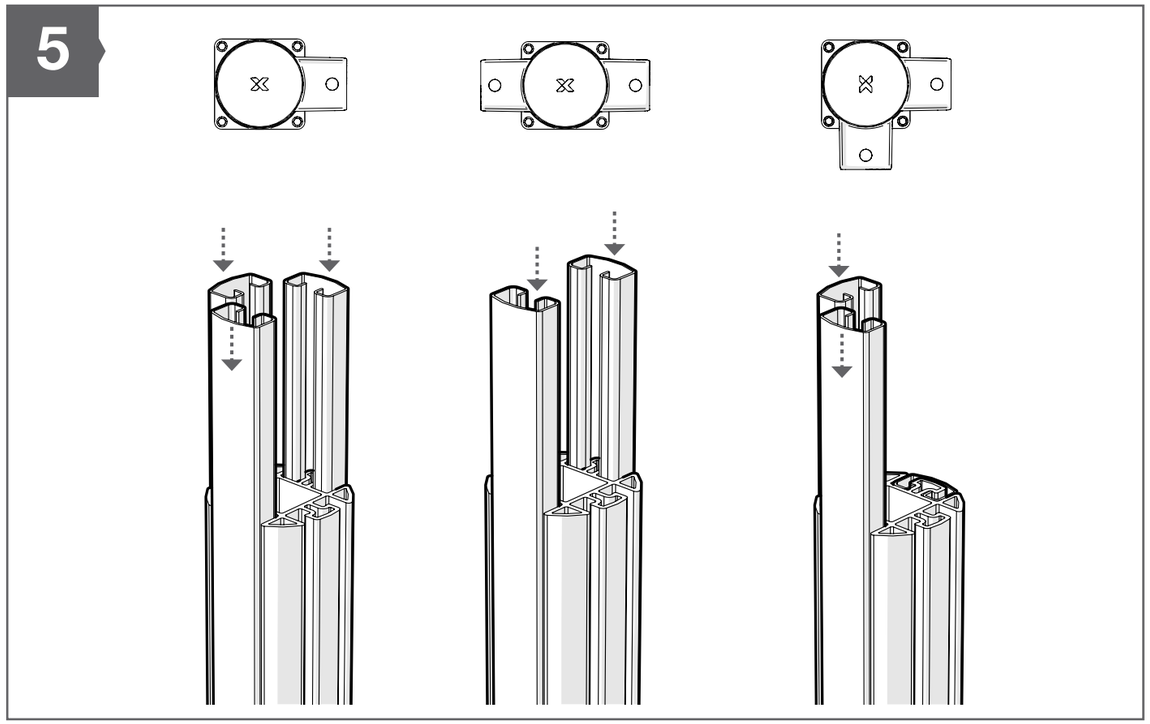
5

6

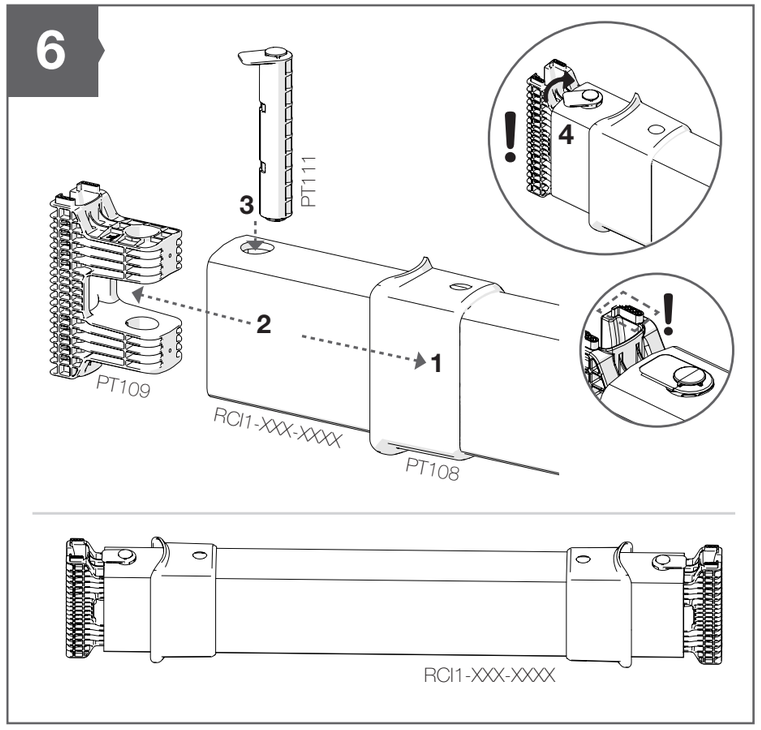
PT111
3
4
2
1
PT109
RCI1-XXX-XXXX
PT108
RCI1-XXX-XXXX

7

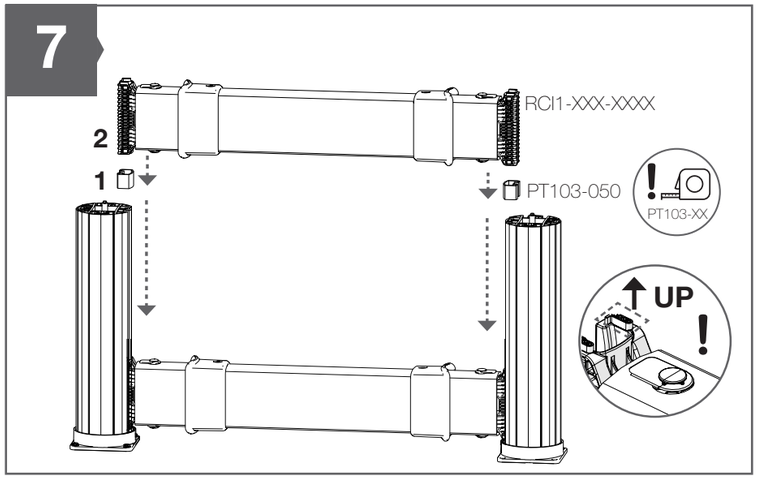
RCI1-XXX-XXXX
2
1
PT103-050
PT103-XX
UP

8

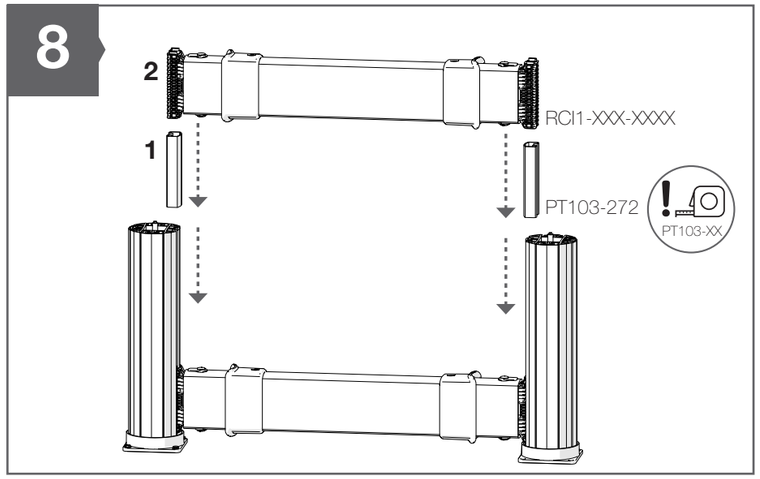
2
RCI1-XXX-XXXX
1
PT103-272
PT103-XX

9

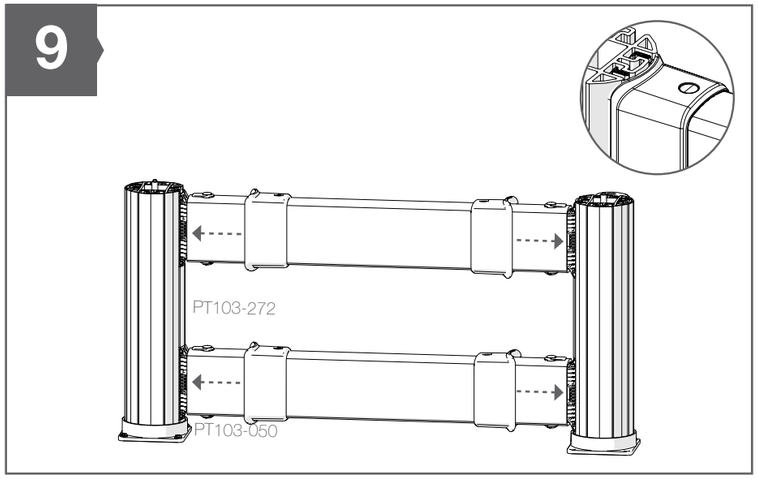
PT103-272
PT103-050

10

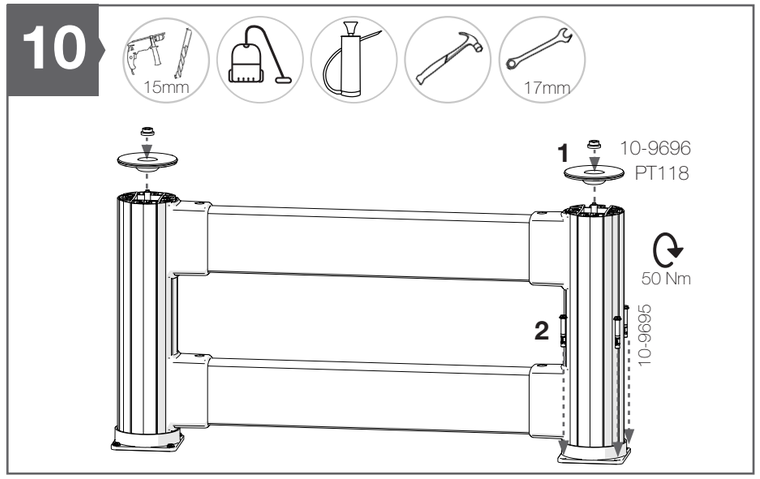
15mm
17mm
1
10-9696
PT118
50 Nm
2
10-9695

11

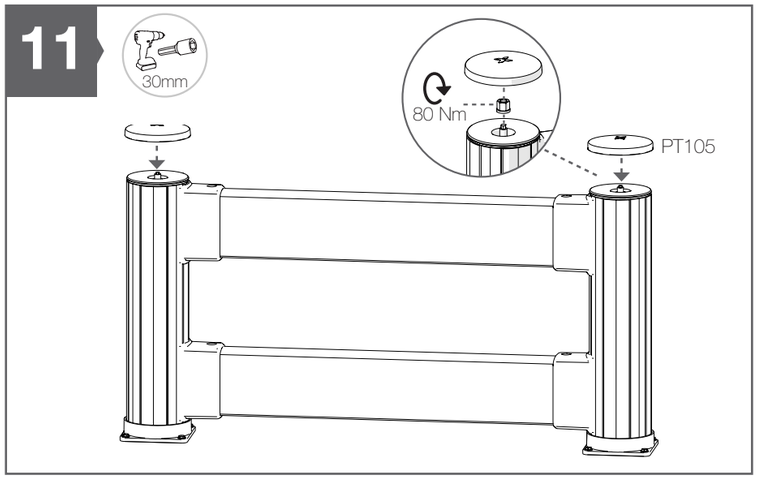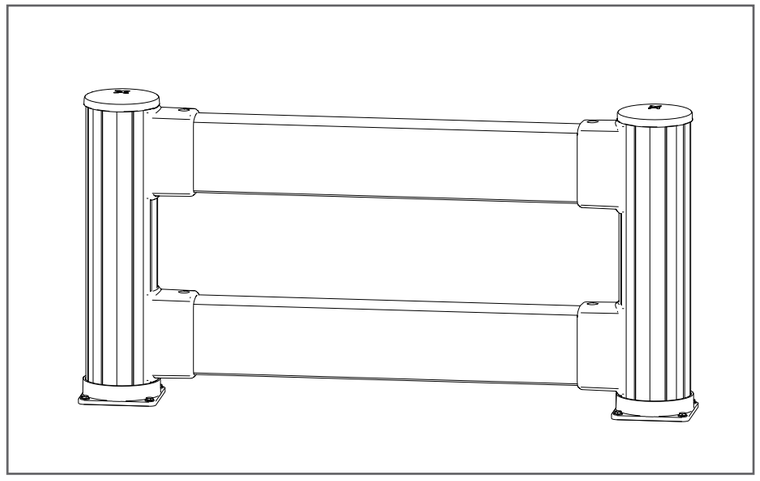
30mm
80 Nm
PT105