Vacuum Pad

New

More shapes and sizes of pads. Applicable for various types of workpieces

Compact/Short/Nozzle ø0.8 to ø15 P. 1 9

Compact, Space-saving

Mark-free ø4 to ø125 P. 25 29

For use where adsorption marks must not be left on workpieces.

Thin Flat/Flat ø5 to ø30 P. 10 12

For sheets or vinyl

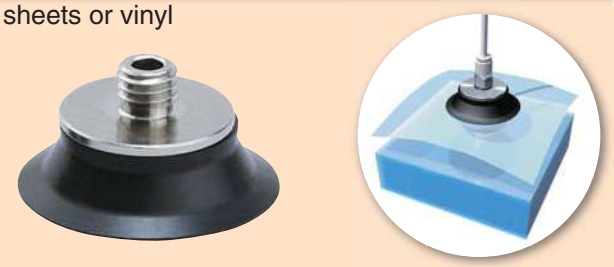

Sponge ø4 to ø15 P. 30 32

For workpieces with bumps

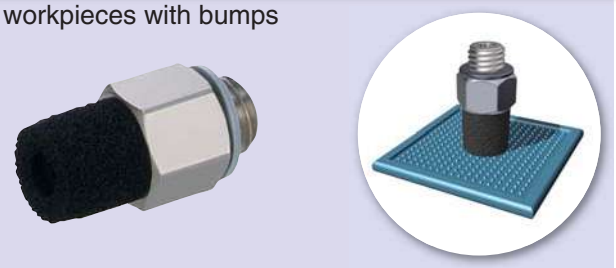

Bellows ø2 to ø46 P. 13 16

For spherical workpieces or workpieces with inclined surface

Heavy-duty ø32 to ø340 P. 33 58

For heavy or large workpieces

Oval 3.5 x 7 to 8 x 30 P. 17 23

For rectangular workpieces

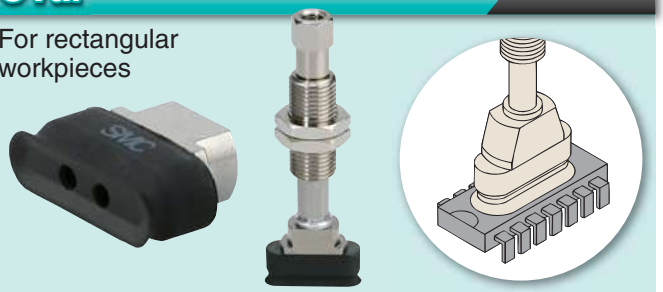

Special Configuration P. 59, 60

For stage setting of disks (CD, DVD) or glass substrates

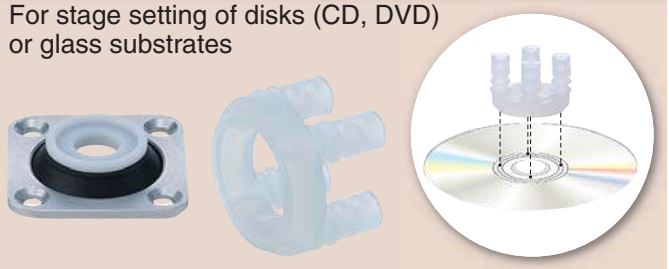

Ball Spline Buffer ø2 to ø8 P. 24

Ball spline guide is used to the buffer.

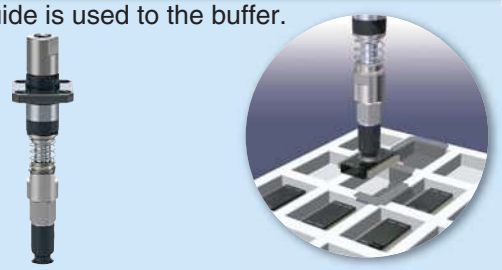

Vacuum Saving Valve P. 61 64

Can restrict the reduction of vacuum pressure even when there is no workpiece.

Series ZP2

SMC

CAT.EUS100-76A-UK

Vacuum Pad Series ZP2/ZP

Pad Diameter List

●: Series ZP2 ○: Series ZP

Pad type	Symbol	Page of ZP2	0.8	1.1	2	3	3.5	4	5	6	7	8	9	10	11	13	14
Flat	U	P. 1	—	—	○	●	—	● Note) / ○	—	○	—	○	—	○	—	○	—
	MU	P. 2	—	—	●	—	●	●	●	●	—	●	—	●	—	—	—
	EU	P. 5	—	—	●	—	—	●	—	●	—	●	—	—	—	—	—
	AU	P. 8	—	—	●	●	—	●	—	●	—	●	—	—	—	—	—
Flat with rib	C	P. 1	—	—	—	—	—	—	—	●	●	●	—	○	—	○	—
Thin flat (pad)	UT	P. 1 P. 10	—	—	—	—	—	—	●	●	—	—	—	○	●	○	●
Thin flat with rib	CT	—	—	—	—	—	—	—	—	—	—	—	—	○	—	○	—
Bellows (pad)	B	P. 1	—	—	—	—	—	—	—	● Note) / ○	—	● Note) / ○	—	○	—	○	—
	J	P. 13	—	—	—	—	—	—	—	●	—	—	●	●	—	—	●
	MB	P. 14	—	—	—	—	—	●	—	●	—	●	—	●	—	—	—
	ZJ	P. 16	—	—	●	—	—	●	●	●	—	—	—	—	—	—	—
Deep	D	—	—	—	—	—	—	—	—	—	—	—	—	○	—	—	—
Nozzle pad	AN	P. 9	●	●	—	—	—	—	—	—	—	—	—	—	—	—	—
Flat pad	MT	P. 11	—	—	—	—	—	—	—	—	—	—	—	●	—	—	—
Oval pad	W	P. 17	—	—	—	—	3.5 x 7 ●	4 x 10 4 x 20 4 x 30 ●	5 x 10 5 x 20 5 x 30 ●	6 x 10 6 x 20 6 x 30 ●	—	8 x 20 8 x 30 ●	—	—	—	—	—
	U	—			2 x 4 ○		3.5 x 7 ○	4 x 10 ○	—	—		—					
Heavy-duty pad	H	P. 33	—	—	—	—	—	—	—	—	—	—	—	—	—	—	—
	HT	P. 33	—	—	—	—	—	—	—	—	—	—	—	—	—	—	—
	HB	P. 35	—	—	—	—	—	—	—	—	—	—	—	—	—	—	—
	HW	P. 36	—	—	—	—	—	—	—	—	—	—	—	—	—	—	—
Mark-free pad	U	P. 27	—	—	—	—	—	●	—	●	—	●	—	●	—	—	—
* Related pad	H	P. 28	—	—	—	—	—	—	—	—	—	—	—	—	—	—	—
Sponge pad	S	P. 30	—	—	—	—	—	●	—	●	—	●	—	●	—	—	—
Resin attachment	K	P. 29	—	—	—	—	—	—	—	●	—	●	—	●	—	●	—
Pad with ball spline buffer	U	P. 24	—	—	●	—	—	●	—	●	—	●	—	—	—	—	—
Heavy-duty ball joint pad	H	P. 37	—	—	—	—	—	—	—	—	—	—	—	—	—	—	—
	HB	P. 43	—	—	—	—	—	—	—	—	—	—	—	—	—	—	—

* Cyclone pad (Non-contact pad) *Made to Order* ·····P. 25

Note) The ZP2 series is blast type.

Products other than above

Vacuum pad for transferring disks ·····P. 59 Vacuum pad for fixing panel ·····P. 60 Vacuum saving valve ·····P. 61

Best Pneumatics

SMC vacuum pad Search

http://www.smcworld.com

∗○: Refer to SMC website or pages 1117 to 1235 in Best Pneumatics No. 4 for details of the ZP series.

Pad diameter																		Symbol	Page of ZP2	Catalogue of ZP
15	16	18	20	25	30	32	40	46	50	63	80	100	125	150	250	300	340			
—	○	—	○	○	—	○	○	—	○	—	—	—	—	—	—	—	—	U	P. 1	
●	—	—	—	—	—	—	—	—	—	—	—	—	—	—	—	—	—	MU	P. 2	—
●	—	—	—	—	—	—	—	—	—	—	—	—	—	—	—	—	—	EU	P. 5	—
—	—	—	—	—	—	—	—	—	—	—	—	—	—	—	—	—	—	AU	P. 8	—
—	○	—	○	○	—	○	○	—	○	—	—	—	—	—	—	—	—	C	P. 1	
—	○	●	●	—	—	—	—	—	—	—	—	—	—	—	—	—	—	UT	P. 1 P. 10	
—	○	—	—	—	—	—	—	—	—	—	—	—	—	—	—	—	—	CT	—	
—	○	—	○	○	—	○	○	—	○	—	—	—	—	—	—	—	—	B	P. 1	
●	●	—	—	●	●	—	—	—	—	—	—	—	—	—	—	—	—	J	P. 13	
●	—	—	●	—	—	—	—	—	—	—	—	—	—	—	—	—	—	MB	P. 14	
—	—	—	—	—	—	—	●	●	—	—	—	—	—	—	—	—	—	ZJ	P. 16	—
—	○	—	—	○	—	—	○	—	—	—	—	—	—	—	—	—	—	D	—	
—	—	—	—	—	—	—	—	—	—	—	—	—	—	—	—	—	—	AN	P. 9	
●	—	—	●	●	●	—	—	—	—	—	—	—	—	—	—	—	—	MT	P. 11	—
—	—	—	—	—	—	—	—	—	—	—	—	—	—	—	—	—	—	W	P. 17	—
																		U	—	
—	—	—	—	—	—	●	○	—	○	○	○	○	○	—	—	●	●	H	P. 33	
—	—	—	—	—	—	—	—	—	—	—	—	—	—	●	●	—	—	HT	P. 33	
—	—	—	—	—	—	●	○	—	○	○	○	○	○	●	—	—	—	HB	P. 35	
—	—	—	—	—	30 x 50 ●	—	—	—	—	—	—	—	—	—	—	—	—	HW	P. 36	
—	●	—	—	●	—	●	●	—	●	—	—	—	—	—	—	—	—	U	P. 27	
—	—	—	—	—	—	—	●	—	●	●	●	●	●	—	—	—	—	H	P. 28	
●	—	—	—	—	—	—	—	—	—	—	—	—	—	—	—	—	—	S	P. 30	—
—	●	—	●	●	—	●	—	—	—	—	—	—	—	—	—	—	—	K	P. 29	
—	—	—	—	—	—	—	—	—	—	—	—	—	—	—	—	—	—	U	P. 24	
—	—	—	—	—	—	—	●	—	●	●	●	●	●	—	—	—	—	H	P. 37	
—	—	—	—	—	—	—	●	—	●	●	●	●	●	—	—	—	—	HB	P. 43	

Series ZP2

Series Variations

Variations		Pad: Symbol	Pad: Type	Pad: Diameter	Adapter type	Page
Compact Pad ■**Flat** For adsorption of general workpieces For adsorption of workpieces with flat and not deformed surface ■**Flat with rib** For a workpiece which is likely to deform or for releasing a workpiece certainly ■**Thin flat** For a workpiece which is likely to deform ■**Bellows** For adsorption of workpieces with inclined surface	 Single unit	U	Flat	ø3, ø4	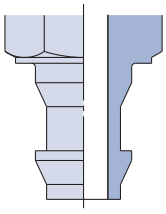 Series ZP Common adapter	P. 1
	 Single unit	C	Flat with rib	ø6, ø7, ø8		P. 1
	 Single unit	UT	Thin flat	ø5, ø6		P. 1
	 Single unit	B	Bellows	ø6, ø8		P. 1
Short-type Pad ■**Space-saving in the height direction** 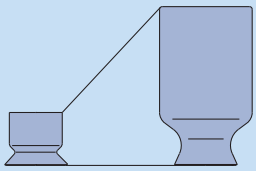	 Single unit With adapter	MU	Flat	ø2, ø3.5, ø4 ø5, ø6, ø8 ø10, ø15	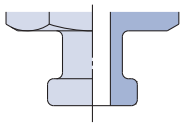	P. 2
	 Single unit With adapter	EU		ø2, ø4, ø6 ø8, ø15	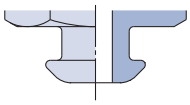	P. 5
	 Single unit	AU		ø2, ø3, ø4 ø6, ø8	—	P. 8
Nozzle Pad ■**For adsorption of small components such as IC chips** 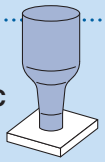	 Single unit With adapter	AN	Nozzle	ø0.8, ø1.1	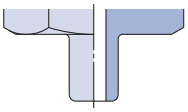	P. 9
Thin Flat Pad ■**For adsorption of soft workpieces such as thin sheets or vinyl. Wrinkling or deformation during adsorption is reduced.**	 Single unit	UT	Thin flat (Skirt)	ø5, ø6, ø11 ø14, ø18 ø20	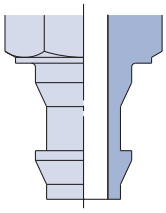 Series ZP Common adapter	P. 10

Variations		Pad			Adapter type	Page
		Symbol	Type	Diameter		
Flat Pad ■ For adsorption of flexible sheets or film. Deformation of the flat surface during adsorption is reduced.	 Single unit With adapter	MT	Thin flat (With groove)	ø10, ø15 ø20, ø25 ø30	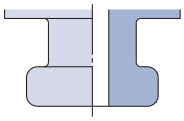	P. 11
Bellows Pad ■ For use where there is no space for the buffer (spring type). For adsorption of workpieces with inclined surface 	 Single unit	J	Bellows (Multistage type)	ø6, ø9, ø10 ø14, ø15 ø16, ø25 ø30	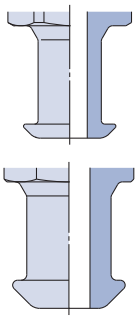 Series ZP Common adapter	P. 13
	 Single unit With adapter	MB	Bellows	ø4, ø6, ø8 ø10, ø15 ø20	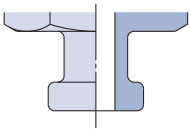	P. 14
	 Single unit	ZJ		ø2, ø4, ø5 ø6, ø40, ø46	—	P. 16

Series Variations

Blast-type Pad

■ Blast treatment to create finely uneven surface for adsorption. workpieces can be removed easily.

Variations	Pad Symbol	Pad Type	Pad Diameter	Adapter type	Page
Single unit	U	Flat	ø4	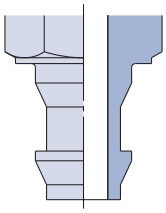	P. 1
Single unit	C	Flat with rib	ø6, ø8		P. 1
Single unit	B	Bellows	ø6, ø8	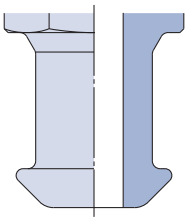	P. 1
Single unit	J	Bellows (Multistage type)	ø10, ø15 ø25, ø30	Series ZP Common adapter	P. 13
Single unit With adapter	MU	Flat	ø2, ø3.5, ø4 ø5, ø6, ø8 ø10, ø15	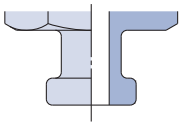	P. 2
Single unit With adapter	EU	Flat	ø2, ø4, ø6	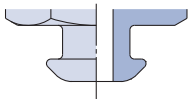	P. 5
Single unit With adapter	MT	Thin flat (With groove)	ø10, ø15 ø20, ø25 ø30	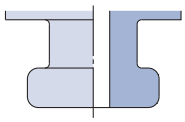	P. 11
Single unit With adapter	MB	Bellows	ø4, ø6, ø8 ø10, ø15 ø20	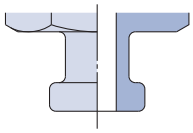	P. 14

Variations		Pad: Symbol	Pad: Type	Pad: Diameter	Adapter type	Page
Oval Pad ■For workpieces with limitations on the adsorption surface 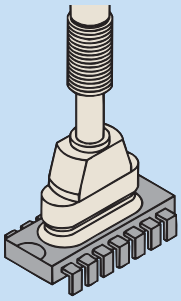	 Single unit	W	Oval	3.5 x 7 4 x 10 5 x 10 6 x 10 4 x 20 5 x 20 6 x 20 8 x 20 4 x 30 5 x 30 6 x 30 8 x 30	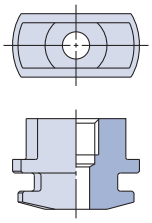	P. 17
	 With adapter: Vacuum inlet direction **Vertical**					P. 18
	 With buffer: Vacuum inlet direction **Vertical**					P. 19
	 With adapter: Vacuum inlet direction **Lateral**					P. 21
	 With buffer: Vacuum inlet direction **Lateral**					P. 23
Pad with Ball Spline Buffer ■Ball spline guide is used to the buffer. 	 With buffer: Vacuum inlet direction **Vertical**	U	Flat	ø2, ø4 ø6, ø8	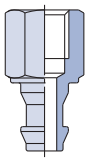 Series ZP Common adapter	P. 24

Series ZP2

Series Variations

Variations		Pad: Symbol	Pad: Type	Pad: Diameter	Adapter type	Page
Mark-free Pad ■For use where adsorption marks must not be left on workpieces. Standard pad Clear trace of the pad Mark-free pad No trace on the object ●Mark-free NBR pad ●Stuck fluororesin pad **Related Pad** *Made to Order* Cyclone Pad (Non-contact pad) P. 25	Single unit	U	Flat	ø4, ø6, ø8 ø10, ø16 ø25, ø32 ø40, ø50	Series ZP Common adapter	P. 27
	Single unit	H	Heavy-duty (Flat with rib)	ø40, ø50 ø63, ø80 ø100, ø125	—	P. 28
Resin Attachment ■Mark-free. Prevents sticking of the rubber and the workpiece. Attachment	Single unit With pad	—	Bellows	ø6, ø8 ø10, ø13 ø16, ø20 ø25, ø32	Series ZP Common adapter	P. 29
Sponge Pad ■For adsorption of workpieces with bumps	Single unit	S	Sponge	ø4, ø6 ø8, ø10 ø15		P. 30
	With adapter					P. 31
Heavy-duty Pad ■For heavy or large workpieces		H	Heavy-duty (Flat with rib)	ø32, ø300 ø340	—	P. 33
		HT	Heavy-duty (Thin flat with rib)	ø150, ø250		P. 33
		HB	Heavy-duty (Bellows)	ø32, ø150		P. 35
		HW	Heavy-duty (Oval)	30 x 50		P. 36

Variations		Pad: Symbol	Pad: Type	Pad: Diameter	Page
Heavy-duty Ball Joint Pad ■For adsorption of workpieces with inclined or curved surface 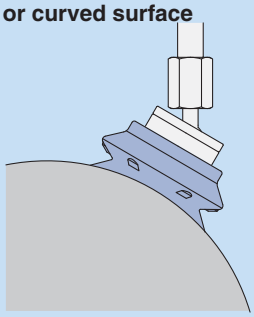	 With adapter: Vacuum inlet direction **Vertical**	H	Heavy-duty (Flat with rib)	ø40 ø50 ø63 ø80 ø100 ø125	P. 37
	 With adapter: Vacuum inlet direction **Lateral**				P. 38
	 With buffer: Vacuum inlet direction **Vertical**				P. 39
	 With buffer: Vacuum inlet direction **Lateral**				P. 41
	 With adapter: Vacuum inlet direction **Vertical**	HB	Heavy-duty (Bellows)	ø40 ø50 ø63 ø80 ø100 ø125	P. 43
	 With adapter: Vacuum inlet direction **Lateral**				P. 44
	 With buffer: Vacuum inlet direction **Vertical**				P. 45
	 With buffer: Vacuum inlet direction **Lateral**				P. 47

Series ZP

Variations		Pad: Symbol	Pad: Type	Pad: Diameter	Adapter type	Page
Heavy-duty Pad ■Heavy-duty type (Flat with rib) Ideal for heavy or large workpieces such as CRT and automobile bodies ■Heavy-duty type (Bellows) • Ideal for workpieces with curved surface • Ideal for heavy or large workpieces		H	Heavy-duty (Flat with rib)	ø40, ø50 ø63, ø80 ø100, ø125	Series ZP Common adapter	P. 49
		HB	Heavy-duty (Bellows)			P. 49

Applications (Pad/Adapter)

Variations		Note	Page
Vacuum Pad for Transferring Disks ■For adsorbing circular components like CD and DVD ■Bellows mechanism is realized in the pad to dampen the impact to the work. 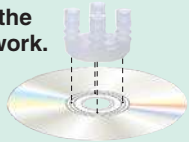		20 x 25 (ID x OD: PCD 22.5)	P. 59
Vacuum Pad for Fixing Panel ■For adsorbing and fixing the stage of panels or glass circuit board, etc. ■Bellows mechanism allows complete contact with curved work surface. 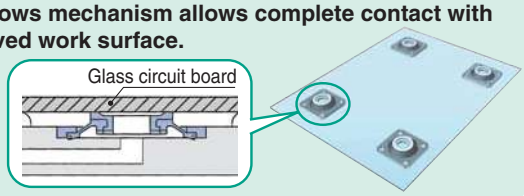		—	P. 60
Vacuum Saving Valve ■Can restrict the reduction of vacuum pressure even when there is no workpiece. ■No need for switching operation when changing workpieces ■Multiple vacuum pads can be operated by one ejector. 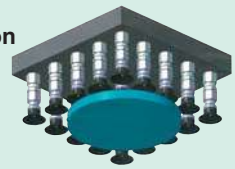		Connection thread size for pad side • M5 x 0.8 • M6 x 1 • M8 x 1.25 • R1/8 • Rc1/8 • G1/8 • NPT1/8	P. 61

Series ZP2/ZP Adapter/Buffer Applicable Pad List ..... P. 65

Series ZP2 Mounting Adapter Part No. ..... P. 69

Series ZP Mounting Adapter Part No. ..... P. 72

Series ZP2 Adapter Assembly Part No. ..... P. 74

Series ZP Adapter Assembly Part No. ..... P. 75

Series ZP2 Buffer Assembly Part No. ..... P. 77

Series ZP Buffer Assembly Part No. ..... P. 80

Vacuum Equipment
Model Selection

CONTENTS

1 Features of Vacuum Adsorption Front matter 11

2 Vacuum Pad Selection Front matter 11

- Vacuum Pad Selection Procedures
- Points for Selecting Vacuum Pads
  A. Theoretical Lifting Force
  B. Shear Force and Moment Applied to Vacuum Pad
- Lifting Force and Vacuum Pad Diameter
  1. Theoretical Lifting Force
- Vacuum Pad Type
- Vacuum Pad Material
- Rubber Material and Properties
- Colour and Identification
- Buffer Attachment
- Pad Selection by Work Type
- Vacuum Pad Durability

3 Selection of Vacuum Ejector and Vacuum Switching Valve Front matter 17

- Calculating Vacuum Ejector and Switching Valve Size with the Formula

4 Leakage Volume during Work Adsorption Front matter 17

- Leakage volume from Conductance of Work
- Leakage volume from Adsorption Test

5 Adsorption Response Time Front matter 18

- Relationship between Vacuum Pressure and Response Time after Supply Valve (Switching Valve) is Operated
- Calculating Adsorption Response Time with the Formula
- Adsorption Response Time from the Selection Graph

6 Precautions on Vacuum Equipment Selection and SMC's Proposal Front matter 20

- Safety Measures
- Precautions on Vacuum Equipment Selection
- Vacuum Ejector or Pump and Number of Vacuum Pads
- Vacuum Ejector Selection and Handling Precautions
- Supply Pressure of Vacuum Ejector
- Timing for Vacuum Generation and Suction Verification
  A. Timing for Vacuum Generation
  B. Suction Verification
  C. Set Pressure for Vacuum Pressure Switch
- Dust Handling of Vacuum Equipment

7 Vacuum Equipment Selection Example Front matter 24

- Transfer of Semiconductor Chips

8 Data Front matter 25

- Selection Graph
- Glossary of Terms
- Countermeasures for Vacuum Adsorption System Problems (Troubleshooting)
- Non-conformance Examples
- Time of Replacement of Vacuum Pad

Model Selection

1 Features of Vacuum Adsorption

Vacuum adsorption system as a method to hold a workpiece has the following features.

- Easy construction
- Compatible with any place where adsorption is possible.
- No need for accurate positioning
- Compatible with soft and easily-deformed workpieces

However, special care is required in the following conditions.

- Workpiece may drop under certain conditions since it is transferred being adsorbed.
- Liquid or foreign matter around the workpiece may be sucked into the equipment.
- Large adsorption area is necessary to get large gripping force.
- Vacuum pad (rubber) may deteriorate.

Fully understand the features above and select the equipment that suits your operating conditions.

2 Vacuum Pad Selection

● Vacuum Pad Selection Procedures

1) Fully taking into account the balance of a workpiece, identify the adsorption positioning, number of pads and applicable pad diameter (or pad area).
2) Find the theoretical lifting force from the identified adsorption area (pad area x number of pads) and vacuum pressure, and then find the lifting force considering actual lifting and safety factor of transfer condition.
3) Determine a pad diameter (or pad area) that is sufficient to ensure the lifting force is greater than the workpiece mass.
4) Determine the pad type and materials, and the necessity of buffer based on the operating environment, and the workpiece shape and materials.

The above shows selection procedures for general vacuum pads; thus, they will not be applicable for all pads. Customers are required to conduct a test on their own and to select applicable adsorption conditions and pads based on the test results.

● Points for Selecting Vacuum Pads

A. Theoretical Lifting Force

- The theoretical lifting force is determined by vacuum pressure and contact area of the vacuum pad.
- Since the theoretical lifting force is the value measured at the static state, the safety factor responding to the actual operating conditions must be estimated in the actual operation.
- It is not necessarily true that higher vacuum pressure is better. Extremely high vacuum pressure may cause problems.

  - When the vacuum pressure is unnecessarily high, pads are likely to be worn out quickly and cracked, which makes the pad service life shorter.
    Doubling the vacuum pressure makes the theoretical lifting force double, while to doubling the pad diameter makes the theoretical lifting force quadruple.
  - When the vacuum pressure (set pressure) is high, it makes not only response time longer, but also the necessary energy to generate a vacuum larger.

Example) Theoretical lifting force = Pressure x Area 2 times →

Pad diameter	Area (cm^2)	**Vacuum pressure [40-kPa]**	Vacuum pressure [80-kPa]
ø20	3.14	**Theoretical lifting force 12.56 N**	Theoretical lifting force 25.11 N
ø40	12.56	**Theoretical lifting force 50.23 N**	Theoretical lifting force 100.45 N

↓ 4 times

B. Shear Force and Moment Applied to Vacuum Pad

- Vacuum pads are not resistant to shear force (parallel force with adsorption surface) and moment.
- Minimise the moment applied to the vacuum pad with the position of the workpiece centre of gravity in mind.
- The acceleration rate of the movement must be as small as possible, and make sure to take into consideration the wind pressure and impact. If measures to slow down the acceleration rate are introduced, safety to prevent the workpiece from dropping will improve.
- Avoid lifting the workpiece by adsorbing the vertical side with a vacuum pad (vertical lifting) if possible. When it is unavoidable, a sufficient safety factor must be secured.

Lifting Force, Moment, Horizontal Force

To lift a workpiece vertically, make sure to take into consideration the acceleration rate, wind pressure, impact, etc., in addition to the mass of the workpiece. (Refer to Fig. 1)
Because the pads are susceptible to moments, mount the pad so as not to allow the workpiece to create a moment. (Refer to Fig. 2)
When a workpiece that is suspended horizontally is moved laterally, the workpiece could shift depending on the extent of the acceleration rate or the size of the friction coefficient between the pad and the workpiece. Therefore, the acceleration rate of the lateral movement must be t. (Refer to Fig. 3)

Fig. 1	Loading by acceleration and wind pressure lifting 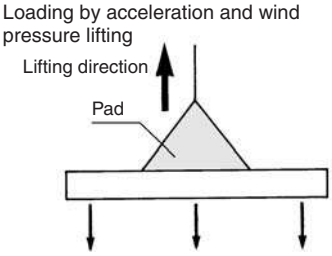 	Fig. 2	Pad positioning 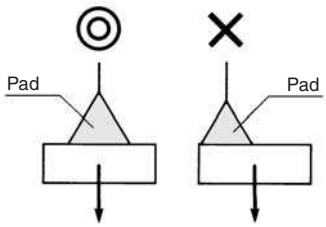 	Fig. 3	Caution for friction force between pad and workpiece 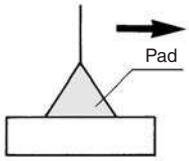

Balance of Pad and Work

Make sure that the pad's suction surface is not larger than the surface of the workpiece to prevent vacuum leakage and unstable picking.

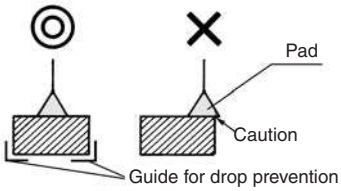

If multiple pads are used for transferring a flat object with a large surface area, properly allocate the pads to maintain balance. Also make sure that the pads are aligned properly to prevent them from becoming disengaged along the edges.

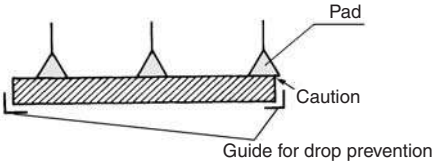

Provide an auxiliary device (example: a guide for preventing the workpieces from dropping) if necessary.

Mounting Position

As a rule, the unit must be installed horizontally. Although a diagonal or a vertical installation should be avoided whenever possible, if the unit must be installed in such a manner, be certain to provide a guide to guarantee absolute safety.

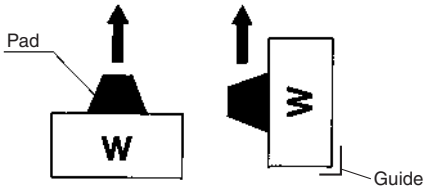

Horizontal lifting **Vertical lifting**

Model Selection

● Lifting Force and Vacuum Pad Diameter

1. Theoretical Lifting Force

- Set the vacuum pressure below the pressure that has been stabilized after adsorption.
- However, when a workpiece is permeable or has a rough surface, note that the vacuum pressure drops since the workpiece takes air in. In such a case, carry out an adsorption test for confirmation.
- The vacuum pressure when using an ejector is approximately –60 kPa as a guide.

The theoretical lifting force of a pad can be found by calculation or from the theoretical lifting force table.

Calculation

$$W = P \times S \times 0.1 \times \frac{1}{t}$$

W : Lifting force (N)
P : Vacuum pressure (kPa)
S : Pad area (cm²)
t : Safety factor Horizontal lifting: 4 or more
Vertical lifting: 8 or more

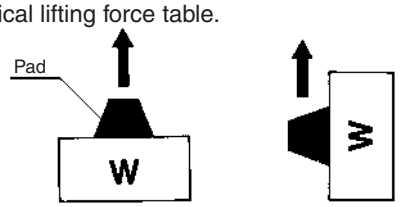

Horizontal lifting

Vertical lifting

(This type of application should basically be avoided.)

Theoretical Lifting Force

The theoretical lifting force (not including the safety factor) is found from the pad diameter and vacuum pressure.
The required lifting force is then found by dividing the theoretical lifting force by the safety factor **t**.

Lifting force = **Theoretical lifting force t**

(1) Theoretical Lifting Force (Theoretical lifting force = P x S x 0.1)

Pad Diameter (ø2 to ø50) (N)

Pad diameter (mm)		ø2	ø4	ø6	ø8	ø10	ø13	ø16	ø20	ø25	ø32	ø40	ø50
Pad area S (cm²)		0.03	0.13	0.28	0.50	0.79	1.33	2.01	3.14	4.91	8.04	12.6	19.6
Vacuum pressure (kPa)	–85	0.27	1.07	2.40	4.27	6.67	11.3	17.1	26.7	41.7	68.3	107	167
	–80	0.25	1.00	2.26	4.02	6.28	10.6	16.1	25.1	39.3	64.3	101	157
	–75	0.24	0.94	2.12	3.77	5.89	10.0	15.1	23.6	36.8	60.3	95	147
	–70	0.22	0.88	1.98	3.52	5.50	9.3	14.1	22.0	34.3	56.3	88	137
	–65	0.20	0.82	1.84	3.27	5.10	8.6	13.1	20.4	31.9	52.2	82	127
	–60	0.19	0.75	1.70	3.01	4.71	8.0	12.1	18.8	29.4	48.2	76	118
	–55	0.17	0.69	1.55	2.76	4.32	7.3	11.1	17.3	27.0	44.2	69	108
	–50	0.16	0.63	1.41	2.51	3.93	6.7	10.0	15.7	24.5	40.2	63	98
	–45	0.14	0.57	1.27	2.26	3.53	6.0	9.0	14.1	22.1	36.2	57	88
	–40	0.13	0.50	1.13	2.01	3.14	5.3	8.0	12.6	19.6	32.2	50	78

Pad Diameter (ø63 to ø340) (N)

Pad diameter (mm)		ø63	ø80	ø100	ø125	ø150	ø250	ø300	ø340
Pad area S (cm²)		31.2	50.2	78.5	122.7	176.6	490.6	706.5	907.5
Vacuum pressure (kPa)	–85	265	427	667	1043	1501	4170	6005	7714
	–80	250	402	628	982	1413	3925	5652	7260
	–75	234	377	589	920	1325	3680	5299	6806
	–70	218	351	550	859	1236	3434	4946	6353
	–65	203	326	510	798	1148	3189	4592	5899
	–60	187	301	471	736	1060	2944	4239	5445
	–55	172	276	432	675	971	2698	3886	4991
	–50	156	251	393	614	883	2453	3533	4538
	–45	140	226	353	552	795	2208	3179	4084
	–40	125	201	314	491	706	1962	2826	3630

Oval Pad (2 x 4 to 8 x 30) (N)

Pad size (mm)		2 x 4	3.5 x 7	4 x 10	5 x 10	6 x 10	4 x 20	5 x 20	6 x 20	8 x 20	4 x 30	5 x 30	6 x 30	8 x 30
Pad area S (cm²)		0.07	0.21	0.36	0.44	0.52	0.76	0.94	1.12	1.46	1.16	1.44	1.72	2.26
Vacuum pressure (kPa)	–85	0.60	1.79	3.06	3.74	4.42	6.46	7.99	9.52	12.41	9.86	12.24	14.62	19.21
	–80	0.56	1.68	2.88	3.52	4.16	6.08	7.52	8.96	11.68	9.28	11.52	13.76	18.08
	–75	0.53	1.58	2.70	3.30	3.90	5.70	7.05	8.40	10.95	8.70	10.80	12.90	16.95
	–70	0.49	1.47	2.52	3.08	3.64	5.32	6.58	7.84	10.22	8.12	10.08	12.04	15.82
	–65	0.46	1.37	2.34	2.86	3.38	4.94	6.11	7.28	9.49	7.54	9.36	11.18	14.69
	–60	0.42	1.26	2.16	2.64	3.12	4.56	5.64	6.72	8.76	6.96	8.64	10.32	13.56
	–55	0.39	1.16	1.98	2.42	2.86	4.18	5.17	6.16	8.03	6.38	7.92	9.46	12.43
	–50	0.35	1.05	1.80	2.20	2.60	3.80	4.70	5.60	7.30	5.80	7.20	8.60	11.30
	–45	0.32	0.95	1.62	1.98	2.34	3.42	4.23	5.04	6.57	5.22	6.48	7.74	10.17
	–40	0.28	0.84	1.44	1.76	2.08	3.04	3.76	4.48	5.84	4.64	5.76	6.88	9.04

● Vacuum Pad Type

- Vacuum pads are available in flat, deep, bellows, thin flat, with rib, and oval types, etc. Select the optimal shape in accordance with the workpiece and operating environment. Please contact SMC for shapes not included in this catalogue.

Pad Type

Pad shape	Application
Flat	To be used when adsorption surface of workpiece is flat and not deformed.
Flat with rib	To be used when workpiece is likely to deform or in the case of releasing work certainly.
Deep	To be used when workpiece is curved shape.
Bellows	To be used when there is not enough space to install buffer or adsorption surface of workpiece is slanted.
Oval	To be used when workpiece has limited adsorption surface or long in length and work is required to locate precisely.

Pad shape	Application
Ball joint	To be used when adsorption surface of workpiece is not horizontal.
Long stroke buffer	To be used when workpiece height is not even or cushioning toward workpiece is required.
Large	To be used when workpiece is heavy weight.
Conductive	As one of the countermeasures against the static electricity, rubber material with reduced resistance is used. For antistatic measures

● Vacuum Pad Material

- It is necessary to determine vacuum pad materials carefully taking into account the workpiece shape, adaptability in the operating environment, effect after being adsorbed, electrical conductivity, etc.
- Based on the work transfer example for each material, select after confirming the characteristics (adaptability) of rubber.

Vacuum Pad/Example of Work Transfer

Material

Material	Application
NBR	Transfer of general work, Corrugated board, Veneer plate, Iron plate and others
Silicone rubber	Semiconductor, Removing from die-casting, Thin work, Food processor
Urethane rubber	Corrugated board, Iron plate, Veneer plate
FKM	Chemical work
Conductive NBR	General work of semiconductor (Static electricity resistance)
Conductive silicone rubber	Semiconductor (Static electricity)

Model Selection

● Rubber Material and Properties

General name		NBR (Nitrile rubber)	Silicone rubber	Urethane rubber	FKM (Fluoro rubber)	CR (Chloroprene rubber)	EPR (Ethylene-propylene rubber)	Conductive NBR (Nitrile rubber)	Conductive silicone rubber	Conductive silicone sponge	Conductive CR sponge (Chloroprene sponge)
Main features		Good oil resistance, abrasion resistance, and aging resistance	Excellent heat resistance, and cold resistance	Excellent mechanical strength	Best heat resistance, and chemical resistance	Well balanced weather resistance, ozone resistance, and chemical resistance	Good aging resistance, ozone resistance, and electrical properties	Good oil resistance, abrasion resistance, and aging resistance. Conductive	Very excellent heat resistance, and cold resistance. Conductive	Excellent heat insulation, and impact resilience	Excellent impact resilience, and sound insulation. Flame retardance
Pure gum property (specific gravity)		1.00-1.20	0.95-0.98	1.00-1.30	1.80-1.82	1.15-1.25	0.86-0.87	1.00-1.20	0.95-0.98	0.4 g/cm³	0.161 g/cm³
Physical properties of blended gum	Impact resilience	○	◎	◎	△	◎	○	○	◎	×/△	×/△
	Abrasion resistance	◎	×/△	◎	◎	◎	○	◎	×/△	×	×
	Tear resistance	○	×/△	◎	○	○	△	○	×/△	×	×
	Flex crack resistance	○	×/○	◎	○	○	○	○	×/○	×	×
	Maximum operation temperature °C	120	200	60	250	150	150	100	200	180	120
	Minimum operation temperature °C	0	–30	0	0	–40	–20	0	–10	–30	–20
	Volume resistivity (cm)	—	—	—	—	—	—	10^4 or less	10^4 or less	4.8×10^4	3.8×10^4
	Heat aging	○	◎	△	◎	○	○	○	◎	△	△
	Weather resistance	○	◎	◎	◎	◎	○	○	◎	△	△
	Ozone resistance	△	◎	◎	◎	○	◎	△	◎	△	△
	Gas permeability resistance	○	×/△	×/△	×/△	○	×/△	○	×/△	×	×
Chemical resistance Oil resistance	Gasoline/Gas oil	◎	×/△	◎	◎	○	×	◎	×/△	×	×
	Benzene/Toluene	×/△	×	×/△	◎	×/△	×	×/△	×	×	×
	Alcohol	◎	◎	△	△/◎	◎	◎	◎	◎	△	△
	Ether	×/△	×/△	×	×/△	×/△	○	×/△	×/△	×	×
	Ketone (MEK)	×	○	×	×	△/○	◎	×	○	×	×
	Ethyl acetate	×/△	△	×/△	×	×/△	◎	×/△	△	×	×
Alkaline resistance Acid resistance	Water	◎	○	△	◎	◎	◎	◎	○	○	○
	Organic acid	×/△	○	×	△/○	×/△	×	×/△	○	×	×
	Organic acid of high concentration	△/○	△	×	◎	○	○	△/○	△	×	×
	Organic acid of low concentration	○	○	△	◎	◎	◎	○	○	×	×
	Strong alkali	○	◎	×	○	◎	◎	○	◎	△	△
	Weak alkali	○	◎	×	○	◎	◎	○	◎	△	△

◎ = Excellent --- Not affected at all, or almost no effect
○ = Good --- Affected a little, but adequate resistance depending on conditions
△ = Better not to use if possible
× = Unsuitable for usage. Severely affected.
∗ Properties, chemical resistance, and other values are not guaranteed. These values depend on the operating environment, so they cannot be guaranteed by SMC. Thorough research and confirmation are necessary before usage.

● Colour and Identification

General name	NBR (Nitrile rubber)	Silicone rubber	Urethane rubber	FKM (Fluoro rubber)	CR (Chloroprene rubber)	EPR (Ethylene-propylene rubber)	Conductive NBR (Nitrile rubber)	Conductive silicone rubber	Conductive silicone sponge	Conductive CR sponge (Chloroprene sponge)
Colour of rubber	Black	White	Brown	Black	Black	Black	Black	Black	Black	Black
Identification (Dot or stamp)	—	—	—	· Green 1 dot Ⓕ	· Red 1 dot Ⓒ	· Ⓔ	· Silver 1 dot	· Silver 2 dots	—	—

● Buffer Attachment

- Use a buffer when there is a variation in the height of workpieces and fragile workpieces are adsorbed (cushioning is necessary). If it is necessary to further position the pad and the workpiece, use a non-rotating buffer.

Unsteady Distance between Pad and Work

If the pad and the workpiece cannot be positioned properly, such as when picking a workpiece having an uneven height, use a built-in spring type pad with a buffer. This type of pad acts as a cushion between the pad and the workpiece. If it is necessary to further position the pad and the workpiece, use a non-rotating buffer.

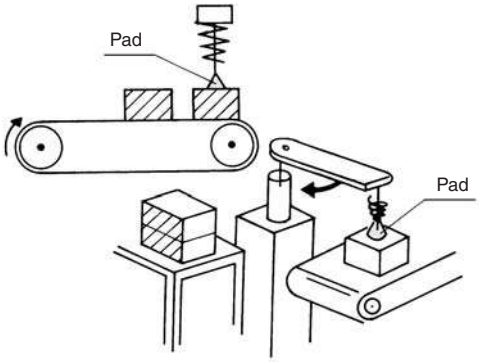

● Pad Selection by Work Type

- Carefully select a pad for the following workpieces.

1. Porous Work

To pick a permeable workpiece such as paper, select a pad with a small diameter that is sufficient to lift the workpiece. Because a large amount of air leakage could reduce the pad's suction force, it may be necessary to increase the capacity of an ejector or vacuum pump or enlarge the conductance area of the piping passage.

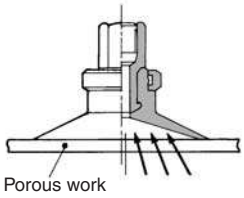

2. Flat Plate Work

When a workpiece with a large surface area such as sheet glass or PCB is suspended, the workpiece could move in a wavelike motion if a large force is applied by wind pressure or by an impact. Therefore, it is necessary to ensure the proper allocation and size of pads.

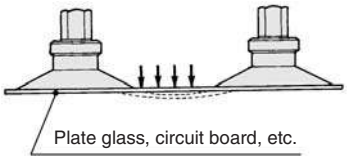

3. Soft Work

If a soft workpiece such as vinyl, paper, or thin sheet is picked up, the vacuum pressure could cause the workpiece to deform or wrinkle. In such a case, it will be necessary to use a small pad or a ribbed pad and reduce the vacuum pressure.

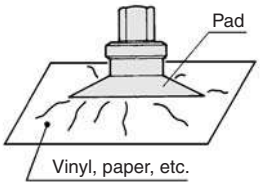

4. Impact to Pad

When pushing a pad to a workpiece, make sure not to apply an impact or a large force which would lead to premature deformation, cracking, or wearing of the pad. The pad should be pushed against the workpiece to the extent that its skirt portion deforms or that its ribbed portion comes into slight contact with the workpiece.
Especially, when using a smaller diameter pad, make sure to locate it correctly.

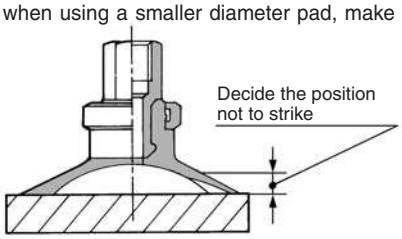

● Vacuum Pad Durability

- Need to be careful of the vacuum pad (rubber) deterioration.
- The vacuum pad's adsorption surface will be worn out when it is used for a certain period of time, and the outer diameter gradually becomes smaller. The lifting force becomes weaker as the pad diameter becomes smaller, but absorption is still possible.
- Since the vacuum pad replacement period greatly varies depending on the operating environment, it is extremely difficult to estimate the replacement period. Specify the period taking into account the actual operating conditions.

Model Selection

3 Selection of Vacuum Ejector and Vacuum Switching Valve

● Calculating Vacuum Ejector and Switching Valve Size with the Formula

Average suction flow rate for achieving adsorption response time

$$Q = \frac{V \times 60}{T_1} + Q_L$$

$$T_2 = 3 \times T_1$$

Q : Average suction flow rate L/min (ANR)
V : Piping capacity (L)
T_1 : Arrival time to stable **Pv** 63% after adsorption (sec)
T_2 : Arrival time to stable **Pv** 95% after adsorption (sec)
Q_L : Leakage volume during work adsorption L/min (ANR) Note 1)

Max. suction flow rate

Qmax = (2 to 3) x Q L/min (ANR)

<Selection Procedure>

- **Ejector**
  Select the ejector with the greater maximum suction flow rate from the **Qmax** indicated above.
- **Direct operation valve**

$$\text{Conductance } C = \frac{Qmax}{5 \times 11.1} \ [dm^3/(s \cdot bar)]$$

∗ Select a valve (solenoid valve) having a conductance that is greater than that of the conductance **C** formula given above from the related equipment (page 1278 in Best Pneumatics No. 4).

Note 1) **Q_L**: **0** when no leakage occurs during adsorbing a workpiece.
If there is leakage during adsorbing a workpiece, find the leakage volume based on "4. Leakage Volume during Work Adsorption."
Note 2) Tube piping capacity can be found in "8. Data: Piping Capacity by Tube I.D. (Selection Graph (2))."

4 Leakage Volume during Work Adsorption

Air could be drawn in depending on the type of workpiece. As a result, the vacuum pressure in the pad becomes reduced and the amount of vacuum that is necessary for adsorption cannot be attained.
When this type of workpiece must be handled, it is necessary to select the proper size of the ejector and the vacuum switching valve by taking into consideration the amount of air that could leak through the workpiece.

● Leakage Volume from Conductance of Work

Leakage volume $Q_L = 11.1 \times 5 \times C_L$

Q_L: Leakage volume L/min (ANR)
C_L: Conductance between work and pad, and work opening area [$dm^3/(s \cdot bar)$]

● Leakage Volume from Adsorption Test

As described in the illustration below, pick up the workpiece with the ejector, using an ejector, pad and a vacuum gauge.
At this time, read vacuum pressure **P_1**, obtain the suction flow rate from the flow-rate characteristics graph for the ejector that is being used, and render this amount as the leakage of the workpiece.

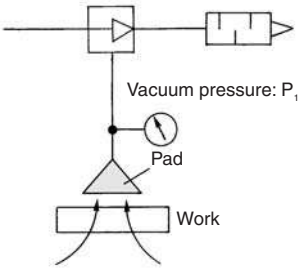

Exercise: Using a supply pressure of 0.45 MPa, when the ejector (ZH07□S) picks up a workpiece that leaks air, the vacuum gauge indicated a pressure of –53 kPa. Calculate the leakage volume from the workpiece.

<Selection Procedure>

When obtaining the suction flow rate at a vacuum pressure of –53 kPa from the ZH07DS flow-rate characteristics graph, the suction flow rate is 5 L/min (ANR). (Ⓐ→Ⓑ→Ⓒ)

Leakage volume Suction flow rate 5 L/min (ANR)

ZH07BS, ZH07DS

Exhaust Characteristics

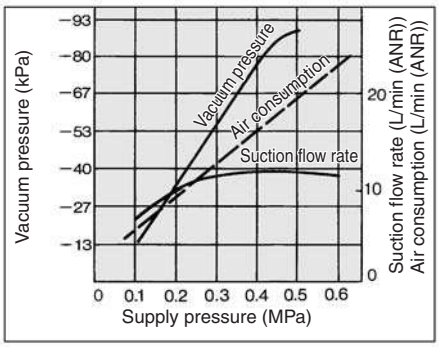

Flow-rate Characteristics
Supply pressure {0.45 MPa}

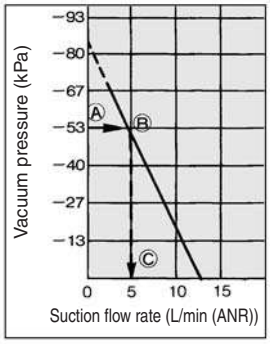

5 Adsorption Response Time

When a vacuum pad is used for the adsorption transfer of a workpiece, the approximate adsorption response time can be obtained (the length of time it takes for the pad's internal vacuum pressure to reach the pressure that is required for adsorption after the supply valve {vacuum switching valve} has been operated). An approximate adsorption response time can be obtained through formulas and selection graphs.

● Relationship between Vacuum Pressure and Response Time after Supply Valve (Switching Valve) is Operated

The relationship between vacuum pressure and response time after the supply valve (switching valve) is operated as shown below.

Vacuum System Circuit

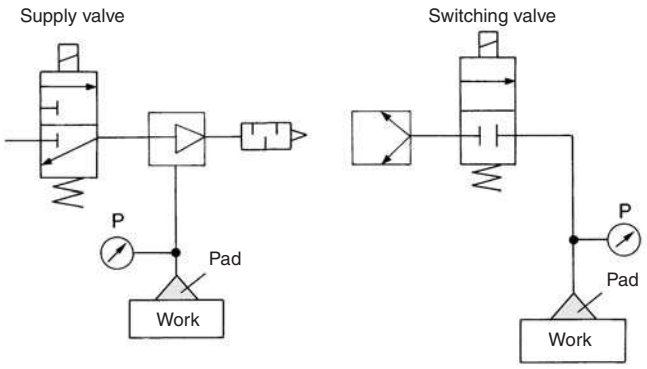

Vacuum Pressure and Response Time after Supply Valve (Switching Valve) is Operated

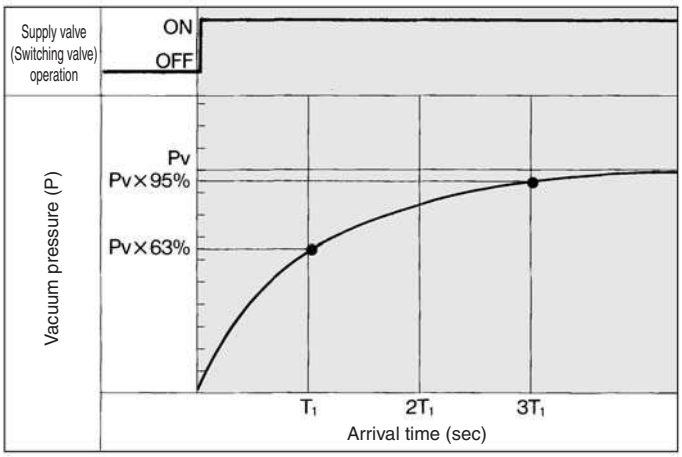

Pv: Final vacuum pressure
T1 : Arrival time to 63% of final vacuum pressure **Pv**
T2 : Arrival time to 95% of final vacuum pressure **Pv**

● Calculating Adsorption Response Time with the Formula

Adsorption response times T_1 and T_2 can be obtained through the formulas given below.

Adsorption response time $T_1 = \frac{V \times 60}{Q}$

Adsorption response time $T_2 = 3 \times T_1$

Piping capacity

$V = \frac{3.14}{4} D^2 \times L \times \frac{1}{1000}$ (L)

T_1 : Arrival time to 63% of final vacuum pressure **Pv** (sec)
T_2 : Arrival time to 95% of final vacuum pressure **Pv** (sec)
Q_1 : Average suction flow rate L/min (ANR)
Calculation of average suction flow rate
• Ejector
Q_1 = (1/2 to 1/3) x Ejector max. suction flow rate L/min (ANR)
• Vacuum pump
Q_1 = (1/2 to 1/3) x 11.1 x Conductance of vacuum pump [dm³/(s·bar)]
D : Piping diameter (mm)
L : Length from ejector and switch valve to pad (m)
V : Piping capacity from ejector and switching valve to pad (L)
Q_2 : Max. flow from ejector and switching valve to pad by piping system
Q_2 = S x 11.1 L/min (ANR)
Q : Smaller one between the Q_1 and Q_2 L/min (ANR)
C : Conductance of piping [dm³/(s·bar)]

For the conductance, the equivalent conductance can be found in "8. Data: Conductance by Tube I.D. (Selection Graph (3))."

Model Selection

● Adsorption Response Time from the Selection Graph

1. Tube Piping Capacity

Piping capacity from the ejector and switching valve at vacuum pump to the pad can be found in “8. Data: Piping Capacity by Tube I.D. (Selection Graph (2)).”

2. Obtain the adsorption response times.

By operating the supply valve (switching valve) that controls the ejector (vacuum pump), the adsorption response times **T_1** and **T_2** that elapsed before the prescribed vacuum pressure is reached can be obtained from the Selection Graph (1).

Selection Graph (1) Adsorption Response Time

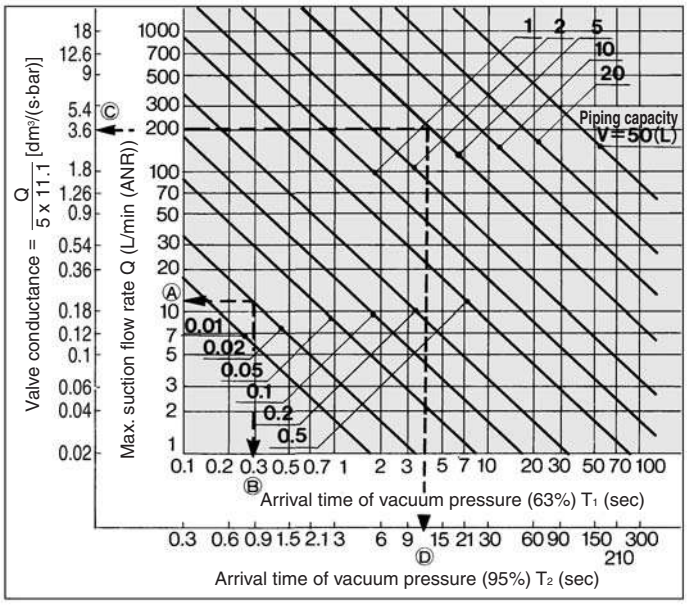

∗ Conversely, the size of the ejector or the size of the switching valve of the vacuum pump system can be obtained from the adsorption response time.

How to read the graph

Example 1: For obtaining the adsorption response time until the pressure in the piping system with a piping capacity of 0.02 L is discharged to 63% (**T_1**) of the final vacuum pressure through the use of the vacuum ejector ZH07□S with a maximum suction flow rate of 12 L/min (ANR).

<Selection Procedure>

From the point at which the vacuum ejector’s maximum vacuum suction flow rate of 12 L/min (ANR) and the piping capacity of 0.02 L intersect, the adsorption response time **T_1** that elapses until 63% of the maximum vacuum pressure is reached can be obtained. (Sequence in Selection Graph (1), Ⓐ→Ⓑ) **T_1 0.3 seconds.**

Example 2: For obtaining the discharge response time until the internal pressure in the 5 L tank is discharged to 95% (**T_2**) of the final vacuum pressure through the use of a valve with a conductance of 3.6 [dm³/(s·bar)].

<Selection Procedure>

From the point at which the valve’s conductance of 3.6 [dm³/(s·bar)] and the piping capacity of 5 L intersect, the discharge response time (**T_2**) that elapses until 95% of the final vacuum pressure is reached can be obtained. (Sequence in Selection Graph (1), Ⓒ→Ⓓ) **T_2 12 seconds.**

6 Precautions on Vacuum Equipment Selection and SMC's Proposal

● Safety Measures

- Make sure to provide a safe design for a vacuum pressure drop due to a disruption of power supply, or a lack of supply air. Drop prevention measures must be taken in particular when dropping a workpiece presents some degree of danger.

● Precautions on Vacuum Equipment Selection

As a countermeasure for power outages, select a supply valve that is normally open or one that is equipped with a self-holding function.

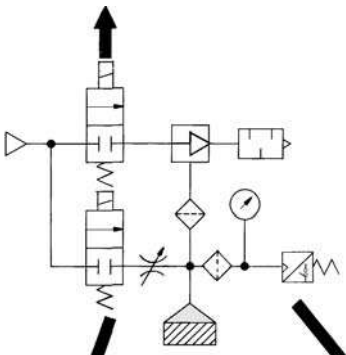

Select a vacuum switching valve that has a conductance that does not reduce the composite conductance consisting of the areas from the pad to the ejector.

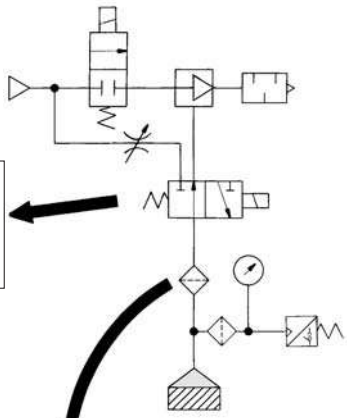

For the release valve, select a 2/3 port valve with a low vacuum specification. Also, use a needle valve to regulate the release flow rate.

- During the adsorption and transfer of a workpiece, verification of the vacuum switch is recommended.
- In addition, visually verify the vacuum gauge when handling a heavy or a hazardous item.
- The ZSP1 type is optimal for the adsorption and transfer of small parts using a suction nozzle with a small diameter.
- Install a filter (Series ZFA, ZFB, ZFC) before the pressure switch if the ambient air is of low quality.

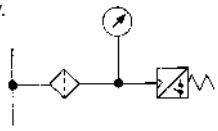

Use a suction filter (Series ZFA, ZFB, ZFC) to protect the switching valve and to prevent the ejector from becoming clogged. Also, a suction filter must be used in a dusty environment. If only the unit's filter is used, it will become clogged quickly.

● Vacuum Ejector or Pump and Number of Vacuum Pads

Ejector and number of pads		Vacuum pump and number of pads	
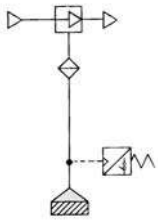	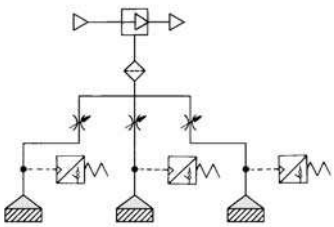	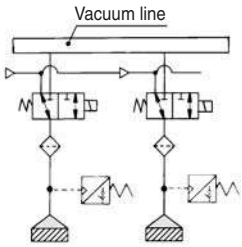	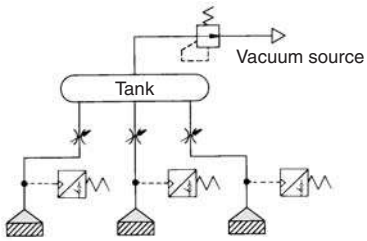
Ideally, one pad should be used for each ejector.	When more than one pad is attached to a single ejector, if one of the workpieces becomes detached, the vacuum pressure will drop, causing other workpieces to become detached. Therefore, the countermeasures listed below must be taken. • Adjust the needle valve to minimise the pressure fluctuation between adsorption and non-adsorption operations. • Provide a vacuum switching valve to each individual pad to minimise the influences on other pads if an adsorption error occurs.	Ideally, one pad should be used for each line.	When more than one pad is attached to a single vacuum line, take the countermeasures listed below. • Adjust the needle valve to minimise the pressure fluctuation between adsorption and non-adsorption operation. • Include a tank and a vacuum pressure reduction valve (vacuum pressure regulator valve) to stabilize the source pressure. • Provide a vacuum switching valve to each individual pad to minimise the influences on other pads if an adsorption error occurs.

Model Selection

● Vacuum Ejector Selection and Handling Precautions

Ejector Selection

There are 2 types of ejector flow-rate characteristics: the high vacuum type (S type) and the high flow type (L type).
During the selection, pay particular attention to the vacuum pressure when adsorbing workpieces that leak.

High Vacuum Type Flow-rate Characteristics/ ZH13□S

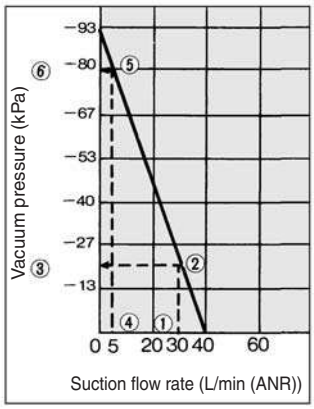

High Flow Type Flow-rate Characteristics/ ZH13□L

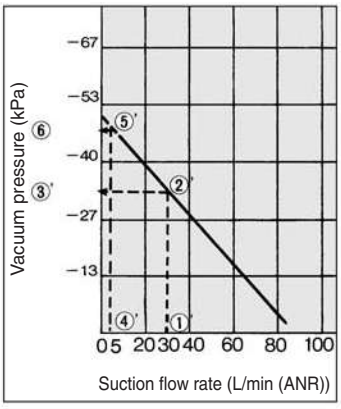

The vacuum pressure varies in accordance with the leakage volumes indicated in the above diagrams.
If the leakage volume is 30 L/min (ANR), the vacuum pressure of the S type is –20 kPa ① → ② → ③, and for the L type it is –33 kPa ①' → ②' → ③'. If the leakage volume is 5 L/min (ANR), the vacuum pressure of the S type is –80 kPa ④ → ⑤ → ⑥, and for the L type it is –47 kPa ④' → ⑤' → ⑥'. Thus, if the leakage volume is 30 L/min (ANR) the L type can attain a higher vacuum pressure, and if the leakage volume is 5 L/min (ANR), the S type can attain a higher vacuum pressure.
Thus, during the selection process, make sure to take the flow-rate characteristics of the high vacuum type (S type) and the high flow type (L type) into consideration in order to select the type that is optimal for your application.

Ejector Nozzle Diameter Selection

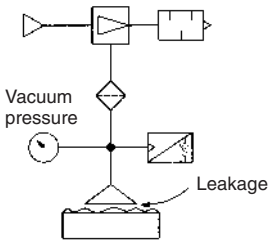

If a considerable amount of leakage occurs between the workpiece and the pad, resulting in incomplete adsorption, or to shorten the adsorption and transfer time, select an ejector nozzle with a larger diameter from the ZH, ZM, ZR, or ZL series.

Manifold Use

Individual exhaust

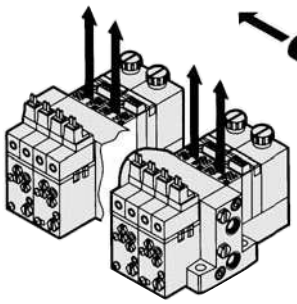

If there are a large number of ejectors that are linked on a manifold and operate simultaneously, use the built-in silencer type or the port exhaust type.

Centralized exhaust

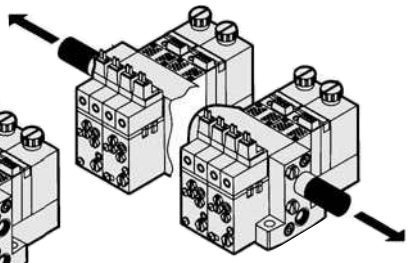

If there are a large number of ejectors that are linked on a manifold, which exhaust collectively, install a silencer at both ends. If the exhaust must be discharged outdoors through piping, make sure that the diameter of the piping is large enough that its back pressure will not affect the operation of the ejectors.

- If the vacuum ejector makes an intermittent noise (abnormal noise) from exhaust at a certain supply pressure, the vacuum pressure will not be stable. It will not be any problem if the vacuum ejector is used under this condition. However, if the noise is disturbing or might affect the operation of the vacuum pressure switch, lower or raise supply pressure a little at a time, and use in an air pressure range that does not produce the intermittent noise.

● Supply Pressure of Vacuum Ejector

- Use the vacuum ejector at the standard supply pressure.
  The maximum vacuum pressure and suction flow rate can be obtained when the vacuum ejector is used at the standard supply pressure, and as a result, adsorption response time also improves. From the viewpoint of energy-saving, it is the most effective to use the ejector at the standard supply pressure. Since using it at the excessive supply pressure causes a decline in the ejector performance, do not use it at a supply pressure exceeding the standard supply.

● Timing for Vacuum Generation and Suction Verification

A. Timing for Vacuum Generation

The time for opening/closing the valve will be counted if a vacuum is generated after the adsorption pad descends to adsorb a workpiece. Also, there is a timing delay risk for the generating vacuum since the operational pattern for the verification switch, which is used for detecting the descending vacuum pad, is not even.
To solve this issue, we recommend that vacuum be generated in advance, before the vacuum pad begins to descend to the workpiece. Adopt this method after confirming that there will be no misalignment resulting from the workpiece's light mass.

B. Suction Verification

When lifting the vacuum pad after absorbing a workpiece, confirm that there is a suction verification signal from the vacuum pressure switch, before the vacuum pad is lifted. If the vacuum pad is lifted, based on the timing of a timer, etc., there is a risk that the workpiece may be left behind.
In general adsorption transfer, the time for adsorbing a workpiece is slightly different since the position of the vacuum pad and the workpiece are different after every operation. Therefore, program a sequence in which the suction completion is verified by a vacuum pressure switch, etc. before moving to the next operation.

C. Set Pressure for Vacuum Pressure Switch

Set the optimum value after calculating the required vacuum pressure for lifting a workpiece.
If a higher pressure than required is set, there is a possibility of being unable to confirm the suction even though the workpiece is adsorbed. This will result in a suction error.
When setting vacuum pressure switch set values, you should set using a lower pressure, with which a workpiece can be adsorbed, only after considering the acceleration or vibration when a workpiece is transferred. The set value of the vacuum pressure switch shortens the time to lift a workpiece. Since the switch detects whether the workpiece is lifted or not, the pressure must be set high enough to detect it.

Vacuum Pressure Switch (Series ZS), Vacuum Pressure Gauge (Series GZ)

When adsorbing and transferring a workpiece, verify at the vacuum pressure switch as much as possible (In addition, visually verify the vacuum gauge, especially when handling a heavy or a hazardous item.).

Approx. ø1 adsorption nozzle
The difference in pressure between ON and OFF becomes small depending on the capacity of the ejector and vacuum pump. In such a case, **it will be necessary to use ZSP1 that can detect a small hysteresis or a flow switch.**

Note) • **A vacuum generator with a large suction capacity will not be detected properly,** so an ejector with an appropriate capacity must be selected.
• Since the hysteresis is small, vacuum pressure must be stabilized.

Suction verification switch
ZSP1

Flow sensor
PFMV

Vacuum pressure gauge
GZ46

Refer to the Best Pneumatics No. 6 for details.

Timing Chart Example

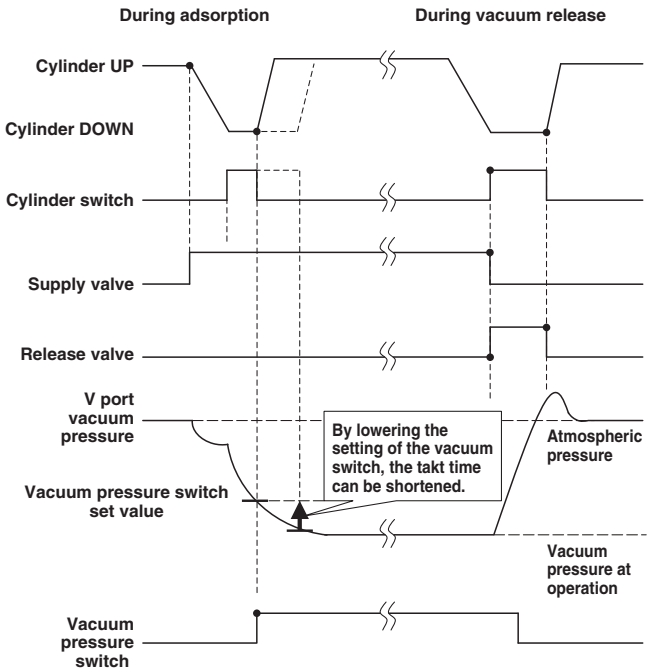

Model Selection

● Dust Handling of Vacuum Equipment

- When the vacuum equipment is used, not only the workpiece, but also dust in the surrounding environment is taken in the equipment. Preventing the intrusion of dust is required more than for any other pneumatic equipment. Some of SMC's vacuum equipment comes with a filter, but when there is a large amount of dust, an additional filter must be installed.
- When vaporized materials such as oil or adhesive are sucked into the equipment, they accumulate inside, which may cause problems.
- It is important to prevent dust from entering the vacuum equipment as much as possible.
  (1) Make sure to keep the working environment and surrounding area of the workpiece clean so that dust will not be sucked in the equipment.
  (2) Check the amount and types of dust before using the equipment and install a filter, in the piping when necessary. In particular, equipment used to capture dust, such as a vacuum cleaner, require a special filter.
  (3) Conduct a test and make sure that operating conditions are cleared before using the equipment.
  (4) Perform filter maintenance depending on the amount of dirt.
  (5) Filter clogging generates a pressure difference between the adsorption and ejector parts. This requires attention, since clogging can prevent proper adsorption from being achieved.

Air Suction Filter (Series ZFA, ZFB, ZFC)

- To protect the switching valve and the ejector from becoming clogged, a suction filter in the vacuum circuit is recommended.
- When using an ejector in a dusty environment, the unit's filter will become clogged quickly, so it is recommended that the ZFA, ZFB or ZFC series be used concurrently.

Vacuum Line Equipment Selection

Determine the volume of the suction filter and the conductance of the switching valve in accordance with the maximum suction flow rate of the ejector and the vacuum pump. Make sure that the conductance is greater than the value that has been obtained through the formula given below. (If the devices are connected in series in the vacuum line, their conductances must be combined.)

$$C = \frac{Qmax}{5 \times 11.1}$$

C: Conductance [$dm^3/(s \cdot bar)$]
Qmax: Max. suction flow rate L/min (ANR)

7 Vacuum Equipment Selection Example

● Transfer of Semiconductor Chips

Selection conditions:

(1) Workpiece: Semiconductor chips
Dimensions: 8 mm x 8 mm x 1 mm, Weight: 1 g
(2) Vacuum piping length: 1 m
(3) Adsorption response time: 300 msec or less

1. Vacuum Pad Selection

(1) Based on the workpiece size, the pad diameter is 4 mm (1 pc.).

(2) Using the formula on the front matter 13, confirm the lifting force.

W = P x S x 0.1 x 1/t
0.0098 = P x 0.13 x 0.1 x 1/4
P = 3.0 kPa

W = 1 g = 0.0098 N
S = $\pi/4 \times (0.4)^2 = 0.13$ cm^2
t = 4 (Horizontal lifting)

According to the calculation, –3.0 kPa or more of vacuum pressure can adsorb the workpiece.

(3) Based on the work shape and type, select:
Pad type: Flat
Pad material: Silicone

(4) According to the results above, select a vacuum pad part number ZPT04US-□□.
(Specify the vacuum entry port (□□) from the pad mounting status.)

2. Vacuum Ejector Selection

(1) Find the vacuum piping capacity.
Assuming that the tube I.D. is 2 mm, the piping capacity is as follows:

$$V = \pi/4 \times D^2 \times L \times 1/1000 = \pi/4 \times 2^2 \times 1 \times 1/1000$$
$$= 0.0031 \text{ L}$$

(2) Assuming that leakage (Q_L) during adsorption is 0, find the average suction flow rate to meet the adsorption response time using the formula on the front matter 17.

$$Q = (V \times 60)/T_1 + Q_L = (0.0031 \times 60)/0.3 + 0 = 0.62 \text{ L}$$

From the formula on the front matter 17, the maximum suction flow rate Q_{max} is

$$Q_{max} = (2 \text{ to } 3) \times Q = (2 \text{ to } 3) \times 0.62$$
$$= 1.24 \text{ to } 1.86 \text{ L/min (ANR)}$$

According to the maximum suction flow rate of the vacuum ejector, a nozzle with a 0.5 diameter can be used.
If the vacuum ejector ZX series is used, representative model ZX105□ can be selected.
(Based on the operating conditions, specify the complete part number for the vacuum ejector used.)

3. Adsorption Response Time Confirmation

Confirm the adsorption response time based on the characteristics of the vacuum ejector selected.

(1) The maximum suction flow rate of the vacuum ejector ZX105□ is 5 L/min. From the formula on the front matter 18, the average suction flow rate Q_1 is as follows:

$$Q_1 = (1/2 \text{ to } 1/3) \times \text{Ejector's max. suction flow rate}$$
$$= (1/2 \text{ to } 1/3) \times 5 = 2.5 \text{ to } 1.7 \text{ L/min}$$

(2) Next, find the maximum flow rate Q_2 of the piping. The conductance **C** is 0.22 from the Selection Graph (3).
From the formula on the front matter 18, the maximum flow rate is as follows:

$$Q_2 = 5 \times C \times 11.1 = 5 \times 0.22 \times 11.1 = 12.2 \text{ L/min}$$

(3) Since Q_2 is smaller than Q_1, $Q = Q_1$.
Thus, from the formula on the front matter 18, the adsorption response time is as follows:

$$T = (V \times 60)/Q = (0.0031 \times 60)/1.7 = 0.109 \text{ second}$$
$$= 109 \text{ msec}$$

It is possible to confirm that the calculation result satisfies the required specification of 300 msec.

8 Data

● Selection Graph

Selection Graph (2) Piping Capacity by Tube I.D.

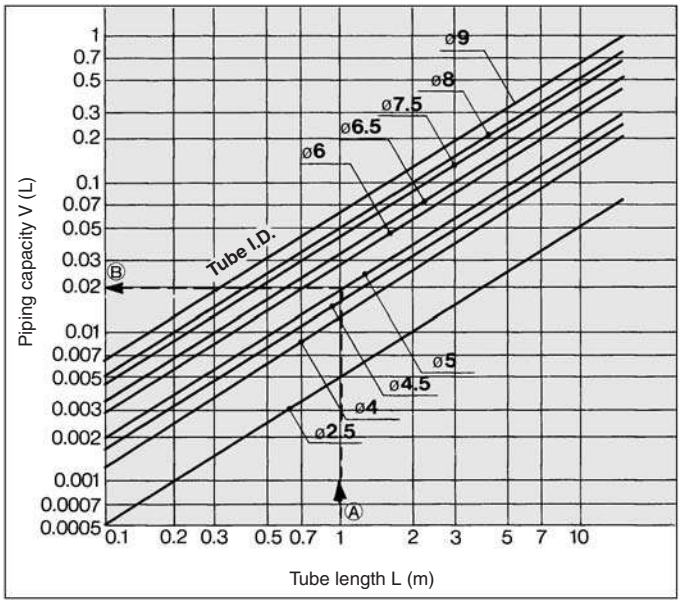

How to read the graph

Example: For obtaining the capacity of tube I.D. ø5 and 1 meter length

<Selection Procedure>

By extending leftward from the point at which the 1 meter tube length on the horizontal axis intersects the line for a tube I.D. ø5, the piping capacity approximately equivalent to 0.02 L can be obtained on the vertical axis.

Piping capacity ≈ 0.02 L

Selection Graph (3) Conductance by Tube I.D.

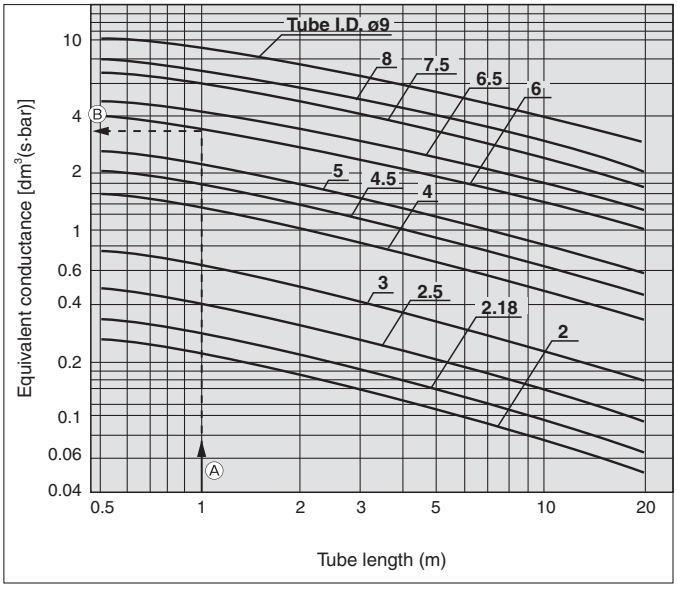

How to read the graph

Example: Tube size ø8/ø6 and 1 meter length

<Selection Procedure>

By extending leftward from the point at which the 1 meter tube length on the horizontal axis intersects the line for a tube I.D. ø6, the equivalent conductance approximately 3.6 [dm³/(s·bar)] can be obtained on the vertical axis.

Equivalent conductance ≈ 3.6 [dm³/(s·bar)]

● Glossary of Terms

Terms	Description
(Max.) suction flow rate	Volume of air taken in by the ejector. The maximum value is the volume of air taken in without having anything connected to the vacuum port.
Maximum vacuum pressure	The maximum value of the vacuum pressure generated by the ejector
Air consumption	The compressed volume of air consumed by the ejector
Standard supply pressure	The optimal supply pressure for operating the ejector
Exhaust characteristics	The relationship between the vacuum pressure and the suction flow rate when the supply pressure to the ejector has been changed.
Flow-rate characteristics	The relationship between the vacuum pressure and the suction flow rate with the standard supply pressure supplied to the ejector.
Vacuum pressure switch	Pressure switch for verifying the adsorption of a workpiece
Suction verification switch	Switch, based on an air pressure bridge, for verifying the adsorption of a workpiece. It is used when the adsorption pad and the nozzle are extremely small.
(Air) supply valve	Valve for supplying compressed air to the ejector
(Vacuum) release valve	Valve for supplying positive pressure or air for breaking the vacuum state of the adsorption pad
Flow adjustment valve	Valve for adjusting the volume of air for breaking the vacuum
Release pressure	Pressure for breaking the vacuum
Pilot pressure	Pressure for operating the ejector valve
External release	The action of breaking the vacuum using externally supplied air instead of using the ejector unit
Vacuum port	Port for generating vacuum
Exhaust port	Port for exhausting air consumed by the ejector, and air taken in from the vacuum port.
Supply port	Port for supplying air to the ejector
Back pressure	Pressure inside the exhaust port
Leakage	The entry of air into the vacuum passage, such as from an area between a workpiece and a pad, or between a fitting and a tube. The vacuum pressure decreases when leakage occurs.
Response time	The time from the application of the rated voltage to the supply valve or release valve, until V port pressure reaches the specified pressure.
Average suction flow rate	The suction flow rate by the ejector or pump for calculating the response speed. It is $1/2$ to $1/3$ of the maximum suction flow rate.
Conductive pad	A low electrical resistance pad for electrostatic prevention measure
Vacuum pressure	Any pressure below the atmospheric pressure. When the atmospheric pressure is used as a reference, the pressure is presented by –kPa (G), and when the absolute pressure is used as a reference, the pressure is represented by kPa (abs). When referencing a piece of vacuum equipment such as an ejector, the pressure is generally represented by –kPa.
Ejector	A unit for generating vacuum by discharging the compressed air from a nozzle at a high speed, based on the phenomenon in which the pressure is reduced when the air around the nozzle is sucked.
Air suction filter	Vacuum filter provided in the vacuum passage for preventing the dust intrusion into the ejector, vacuum pump, or peripheral equipment

● Countermeasures for Vacuum Adsorption System Problems (Troubleshooting)

Condition & Description of improvement	Contributing factor	Countermeasure
Initial adsorption problem (During trial operation)	Adsorption area is small. (Lifting force is lower than the workpiece mass.)	Reconfirm the relationship between workpiece mass and lifting force. • Use a vacuum pad with a large adsorption area. • Increase the quantity of vacuum pads.
	Vacuum pressure is low. (Leakage from adsorption surface) (Air permeable workpiece)	Eliminate (reduce) leakage from adsorption surface. • Reconsider shape of vacuum pad. Confirm the relationship between suction flow rate and arrival pressure of vacuum ejector. • Use a vacuum ejector with a high suction flow rate. • Increase adsorption area.
	Vacuum pressure is low. (Leakage from vacuum piping)	Repair leakage point.
	Internal volume of vacuum circuit is large.	Confirm the relationship between internal volume of the vacuum circuit and suction flow rate of the vacuum ejector. • Reduce internal volume of the vacuum circuit. • Use a vacuum ejector with a high suction flow rate.
	Pressure drop of vacuum piping is large.	Reconsider vacuum piping. • Use a shorter or larger tube (with appropriate diameter).
	Inadequate supply pressure of vacuum ejector	Measure supply pressure in vacuum generation state. • Use standard supply pressure. • Reconsider compressed air circuit (line).
	Clogging of nozzle or diffuser (Infiltration of foreign objects during piping)	Remove foreign objects.
	Supply valve (switching valve) is not being activated.	Measure supply voltage at the solenoid valve with a tester. • Review electric circuits, wiring and connectors. • Use in the rated voltage range.
	Workpiece deforms during adsorption.	Since a workpiece is thin, it deforms and leakage occurs. • Use a pad for adsorption of thin objects.
Late vacuum achieving time (Shortening of response time)	Internal volume of vacuum circuit is large.	Confirm the relationship between internal volume of the vacuum circuit and suction flow rate of the vacuum ejector. • Reduce internal volume of the vacuum circuit. • Use a vacuum ejector with a high suction flow rate.
	Pressure drop of vacuum piping is large.	Reconsider vacuum piping. • Use a shorter or larger tube (with appropriate diameter).
	Using the product as close to the highest vacuum power in the specifications.	Set vacuum pressure to minimum necessary value by optimizing the pad diameter, etc. As the vacuum power of an ejector (venturi) rises, the vacuum flow actually lowers. When an ejector is used at its highest possible vacuum value, the vacuum flow will lower. Due to this, the amount of time needed to achieve adsorption is lengthened. One should consider an increase in the diameter of the ejector nozzle or an increase the size of the vacuum pad utilised in order to lower the required vacuum pressure, maximum the vacuum flow, and speed up the adsorption process.
	Setting of vacuum pressure switch is too high.	Set to suitable setting pressure.

Condition & Description of improvement	Contributing factor	Countermeasure
Fluctuation in vacuum pressure	Fluctuation in supply pressure	Reconsider compressed air circuit (line). (Addition of a tank, etc.)
	Vacuum pressure may fluctuate under certain conditions due to ejector characteristics.	Lower or raise supply pressure a little at a time, and use in a supply pressure range where vacuum pressure does not fluctuate.
Occurrence of abnormal noise (intermittent noise) from exhaust of vacuum ejector	Intermittent noise may occur under certain conditions due to ejector characteristics.	Lower or raise supply pressure a little at a time, and use in a supply pressure range where the intermittent noise does not occur.
Air leakage from vacuum port of manifold type vacuum ejector	Exhaust air from the ejector enters the vacuum port of another ejector that is stopped.	Use a vacuum ejector with a check valve. (Please contact SMC for the part no. of an ejector with a check valve.)
Adsorption problem over time (Adsorption was normal during trial operation.)	Clogging of suction filter	Replace filters. Improve installation environment.
	Clogging of sound absorbing material	Replace sound absorbing materials. Add a filter to supply (compressed) air circuit. Install an additional suction filter.
	Clogging of nozzle or diffuser	Remove foreign objects. Add a filter to supply (compressed) air circuit. Install an additional suction filter.
	Vacuum pad (rubber) deterioration, cracking, etc.	Replace vacuum pads. Confirm compatibility of vacuum pad material and workpiece.
Workpiece is not released.	Inadequate release flow rate	Open release flow adjustment needle.
	Viscosity increase due to vacuum pad (rubber) wear	Replace vacuum pads. Confirm compatibility of vacuum pad material and workpiece.
	Vacuum pressure is too high.	Set vacuum pressure to minimum necessary value.
	Effects due to static electricity	Use a conductive pad.

●Non-conformance Examples

■ No problem occurred during the test, but adsorption becomes unstable after starting operation.

[Possible causes]

- Setting of the vacuum switch is not appropriate. Supply pressure is unstable. Vacuum pressure does not reach the set pressure.
- There is leakage between the workpiece and the vacuum pad.

[Remedy]

1) Set the pressure for the vacuum equipment (supply pressure, if using an ejector) to the necessary vacuum pressure during the adsorption of the workpieces. And set the set pressure for the vacuum switch to the necessary vacuum pressure for adsorption.
2) It is presumed that there was leakage during the test, but it was not serious enough to prevent adsorption. Revise the vacuum ejector and the shape, diameter, and material of the vacuum pad.
   Revise the vacuum pad.

■ Adsorption becomes unstable after replacing the pad.

[Possible causes]

- Initial setting conditions (vacuum pressure, vacuum switch setting, height of the pad) have changed. Settings have changed because the pad was worn out or had permanent setting due to the operating environment.
- When the pad was replaced, leakage was generated from the screw connection part, or the engagement between the pad and the adapter.

[Remedy]

1) Revise the operating conditions including vacuum pressure, the set pressure of the vacuum switch, and the height of the pad.
2) Revise the engagement.

■ Identical pads are used to adsorb identical workpieces, but some of the pads cannot adsorb the workpieces.

[Possible causes]

- There is leakage between the workpiece and the vacuum pad.
- The supply circuit for the cylinder, the solenoid valve and the ejector is in the same pneumatic circuit system. The supply pressure decreases when they are used simultaneously. (Vacuum pressure does not increase)
- There is leakage from the screw connection part or the engagement between the pad and the adapter.

[Remedy]

1) Revise the pad diameter, shape, material, vacuum ejector (suction flow rate), etc.
2) Revise the pneumatic circuit.
3) Revise the engagement.
   ∗ In principle, vacuum pads are molded using a die. Therefore, there is minimal variance in dimensions between products.

■ The workpiece cannot be separated from the pad. The workpiece sticks to the rubber part of the bellows.

[Possible causes]

- The adhesiveness of the rubber material is high. Adhesiveness increases due to the operating environment (wearing of the pad, etc.).
- Vacuum pressure is higher than necessary, so excessive force (adhesiveness of the rubber + vacuum pressure) is applied to the pad (rubber part).

[Remedy]

1) Revise the shape, material, and quantity of vacuum pads.
2) Reduce the vacuum pressure. If inadequate lifting force causes a problem in transferring the workpieces due to the reduction of vacuum pressure, increase the number of pads, or select pads with larger diameter.

■When mounted with the nut, sometimes the buffer operation is not smooth, or the buffer does not slide.

[Possible causes]

- The tightening torque of the nut for mounting the buffer is too high.
- Particles stuck to the sliding surface, or it is scratched.
- Lateral load applied to the piston rod, causing eccentric wearing.

[Remedy]

Tighten the nut to the recommended tightening torque.

The nut may become loose depending on the operating conditions and environment. Be sure to perform regular maintenance.

General Purpose

Product specifications			Nut tightening torque
Pad diameter	Product part no.	Mounting thread size	
ø2 to ø16 2004 to 4010	ZP∗ (02 to 08) U, B∗ ZP∗ (10 to 16) UT, CT∗ ZP∗ (2004 to 4010) U∗	M8 x 1	1.5 to 2.0 N·m
ø10 to ø32	ZP∗ (10 to 32) U, C, B, D∗ ZP∗ (10 to 16) F∗	M10 x 1	2.5 to 3.5 N·m
ø20 to ø50	ZP∗ (40, 50) U, C, B, D∗ ZP∗ (20 to 50) F∗	M14 x 1	6.5 to 7.5 N·m

Heavy-duty Pad

Product specifications					Nut tightening torque
Pad diameter	Product part no.		Mounting thread size	Buffer body material	
ø40, ø50	ZP∗ (40/50) H∗ ZP∗ (40/50) HB∗	J JB JF ∗	M18 x 1.5	Aluminum alloy	9.5 to 10.5 N·m
				Brass	28 to 32 N·m
				Steel	48 to 52 N·m
ø63, ø80	ZP∗ (63/80) H∗ ZP∗ (63/80) HB∗	J JB JF ∗	M18 x 1.5	Aluminum alloy	9.5 to 10.5 N·m
				Brass	28 to 32 N·m
				Steel	48 to 52 N·m
ø100, ø125	ZP∗ (100/125) H∗ ZP∗ (100/125) HB∗	J JB JF ∗	M22 x 1.5	Aluminum alloy	9.5 to 10.5 N·m
				Brass	45 to 50 N·m
				Steel	75 to 80 N·m

Heavy-duty Ball Joint Pad

Product specifications					Nut tightening torque
Pad diameter	Product part no.		Mounting thread size	Buffer body material	
ø40, ø50	ZP2-∗F (40/50) H∗ ZP2-∗F (40/50) HB∗	JB JF ∗	M18 x 1.5	Brass	28 to 32 N·m
				Steel	48 to 52 N·m
ø63, ø80	ZP2-∗F (63/80) H∗ ZP2-∗F (63/80) HB∗	JB JF ∗	M22 x 1.5	Brass	45 to 50 N·m
				Steel	75 to 80 N·m
ø100, ø125	ZP2-∗F (100/125) H∗ ZP2-∗F (100/125) HB∗	JB JF ∗	M22 x 1.5	Brass	45 to 50 N·m
				Steel	75 to 80 N·m

●Time of Replacement of Vacuum Pad

The vacuum pad is disposable. Replace it on a regular basis.

Continued use of the vacuum pad will cause wear and tear on the adsorption surface, and the exterior dimensions will gradually get smaller and smaller. As the pad diameter gets smaller, lifting force will decrease, though adsorption is possible.

It is extremely difficult to provide advice on the frequency of vacuum pad exchange. This is because there are numerous factors at work, including surface roughness, operationg environment (temperature, humidity, ozone, solvents, etc.), and operating conditions (vacuum pressure, workpiece weight, pressing force of the vacuum pad on the workpiece, presence or absence of a buffer, etc.).

Thus, the customer should decide when the vacuum pad should be exchanged, based on its condition at time of initial use.

The bolt may become loose depending on the operating conditions and environment. Be sure to perform regular maintenance.

Recommended Tightening Torque for Replacement of Heavy-duty Pad

Product specifications			Bolt tightening torque
Pad diameter	Product part no.	Bolt	
ø40, ø50	ZP (40/50) H∗ ZP (40/50) HB∗	M3 x 8	0.7 to 0.9 N·m
ø63, ø80	ZP (63/80) H∗ ZP (63/80) HB∗	M4 x 8	0.9 to 1.1 N·m
ø100, ø125	ZP (100/125) H∗ ZP (100/125) HB∗	M5 x 10	2.3 to 2.7 N·m

Assemble parts with recommended tightening torque.

Compact Pad

Pad diameter ø3, ø4, ø5, ø6, ø7, ø8

Symbol/Type

U: Flat
C: Flat with rib
UT: Thin flat
B: Bellows

■7 types of ø3 to ø8 are added.
■Applicable for the ZP series adapter

How to Order

Pad unit ZP2 − 03 U N

Pad diameter

Symbol	Pad diameter	Blast type
03	ø3	—
B04	ø4	●
05	ø5	—
06	ø6	—
B06	ø6	●
07	ø7	—
B08	ø8	●

∗ Blast type: Workpieces can be removed easily.

Pad material

Symbol	Material
N	NBR
S	Silicone rubber
U	Urethane rubber
F	FKM
GN	Conductive NBR
GS	Conductive silicone rubber

Pad type—Pad diameter

Pad type \ Pad diameter (Symbol)	03	B04	05	06	B06	07	B08
U (Flat)	●	●	—	—	—	—	—
C (Flat with rib)	—	—	—	—	●	●	●
UT (Thin flat)	—	—	●	●	—	—	—
B (Bellows)	—	—	—	—	●	—	●

Dimensions: Pad Unit

ZP2-03U□

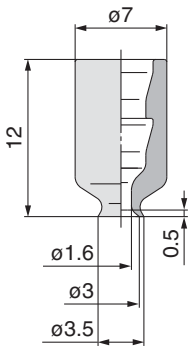

ZP2-B04U□

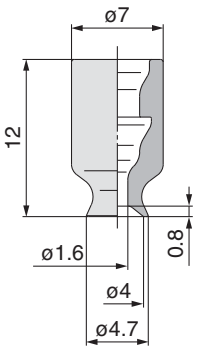

ZP2-05UT□

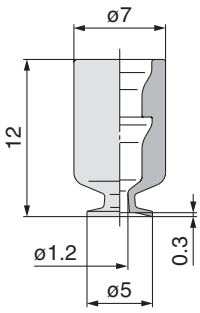

ZP2-06UT□

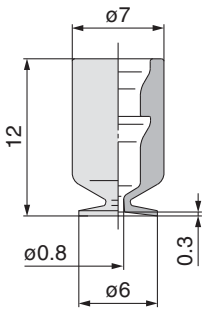

ZP2-B06B□

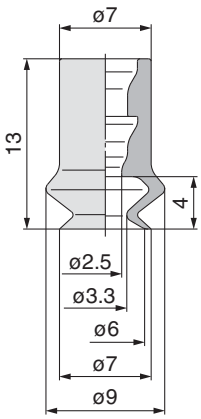

ZP2-B08B□

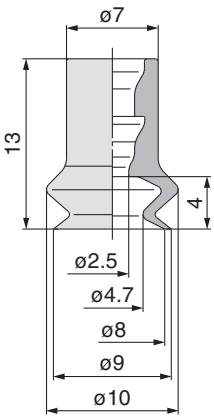

ZP2-B06C□

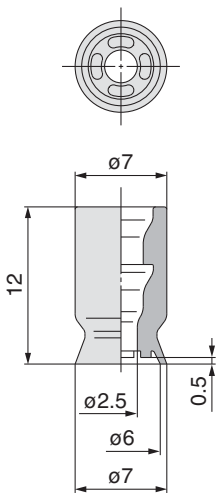

ZP2-07C□

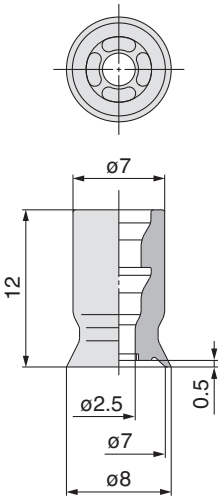

ZP2-B08C□

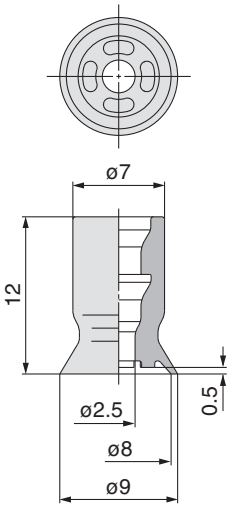

Adapter Mounting Dimensions

If an adapter is made by the customer, design the adapter with the dimensions shown below.

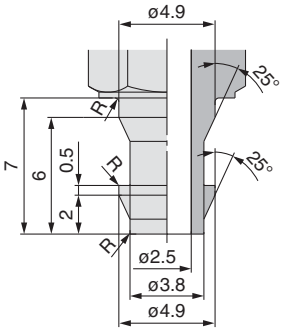

Note) R part has to be smooth with no corners.
∗ Refer to page 66 for adapter applicable to the ZP series.

Short-type Pad

Pad diameter ø2, ø3.5, ø4, ø5, ø6, ø8, ø10, ø15

Symbol/Type
MU: Flat

■**Space-saving in the height direction**

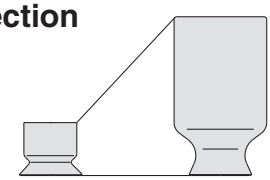

How to Order

Pad unit ZP2 – B02 MU N

Pad diameter

Symbol	Pad diameter	Blast type
B02	ø2	●
B035	ø3.5	●
B04	ø4	●
B05	ø5	●
B06	ø6	●
B08	ø8	●
B10	ø10	●
B15	ø15	●

∗ Blast type: workpieces can be removed easily.

Pad type

Symbol	Type
MU	Flat

Pad material

Symbol	Material
N	NBR
S	Silicone rubber
U	Urethane rubber
F	FKM
GN	Conductive NBR
GS	Conductive silicone rubber

Dimensions: Pad Unit

ZP2-B02MU□

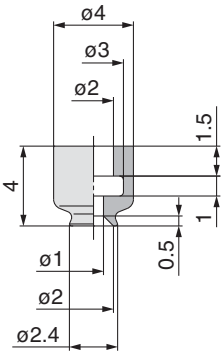

ZP2-B035MU□

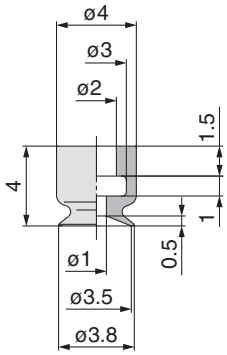

ZP2-B04MU□

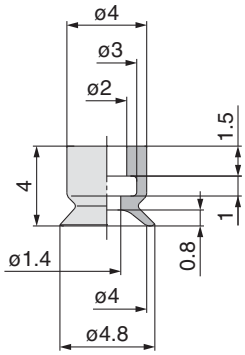

ZP2-B05MU□

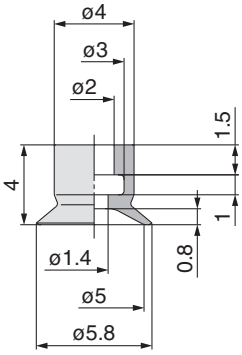

ZP2-B06MU□

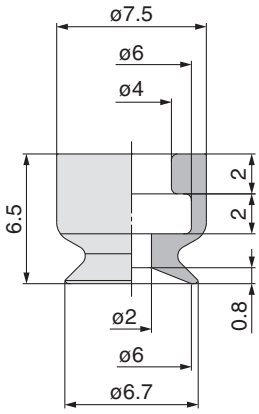

ZP2-B08MU□

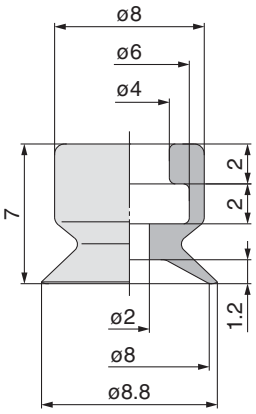

ZP2-B10MU□

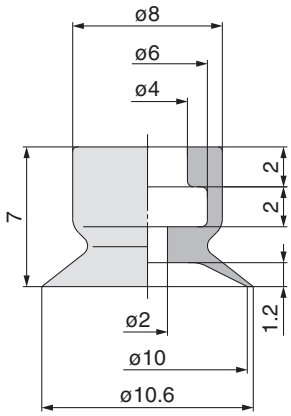

ZP2-B15MU□

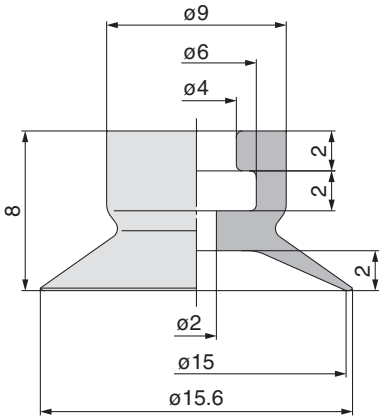

Adapter Mounting Dimensions

If an adapter is made by the customer, design the adapter with the dimensions shown below.

Applicable pad
B02MU/B035MU/B04MU/B05MU

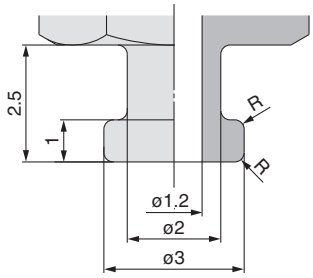

Applicable pad
B06MU/B08MU/B10MU/B15MU

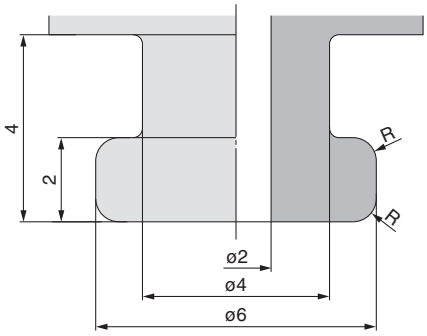

Note) R part has to be smooth with no corners.
∗ Refer to page 69 for adapter applicable to the ZP2 series.

How to Order

With adapter **ZP2 – T B02 MU N – A3**

Vacuum inlet direction

Symbol	Direction
T	Vertical

Pad diameter

Symbol	Pad diameter	Blast type
B02	ø2	●
B035	ø3.5	●
B04	ø4	●
B05	ø5	●
B06	ø6	●
B08	ø8	●
B10	ø10	●
B15	ø15	●

∗ Blast type: Workpieces can be removed easily.

Pad type

Symbol	Type
MU	Flat

Pad material

Symbol	Material
N	NBR
S	Silicone rubber
U	Urethane rubber
F	FKM
GN	Conductive NBR
GS	Conductive silicone rubber

Mounting

Thread size \ Pad diameter (Symbol)	B02	B035	B04	B05	B06	B08	B10	B15
A3 (M3 x 0.5 Male thread)	●	●	●	●	—	—	—	—
H5 (M5 x 0.8 Male thread)	—	—	—	—	●	●	●	●
B5 (M5 x 0.8 Female thread)	—	—	—	—	●	●	●	●

Replacement Part No.

Model	Pad unit part no.	Adapter part no.
ZP2-TB02MU□-A3	ZP2-B02MU□	ZP2A-M01P
ZP2-TB035MU□-A3	ZP2-B035MU□	
ZP2-TB04MU□-A3	ZP2-B04MU□	
ZP2-TB05MU□-A3	ZP2-B05MU□	
ZP2-TB06MU□-H5	ZP2-B06MU□	ZP2A-M02P
ZP2-TB08MU□-H5	ZP2-B08MU□	
ZP2-TB10MU□-H5	ZP2-B10MU□	
ZP2-TB15MU□-H5	ZP2-B15MU□	
ZP2-TB06MU□-B5	ZP2-B06MU□	ZP2A-M04
ZP2-TB08MU□-B5	ZP2-B08MU□	
ZP2-TB10MU□-B5	ZP2-B10MU□	
ZP2-TB15MU□-B5	ZP2-B15MU□	

Note) □ in the table indicates the pad material.

Dimensions: With Adapter

ZP2-TB02MU□-A3

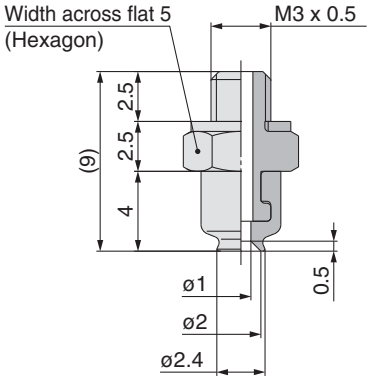

ZP2-TB035MU□-A3

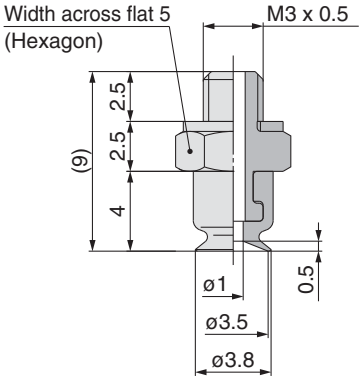

ZP2-TB04MU□-A3

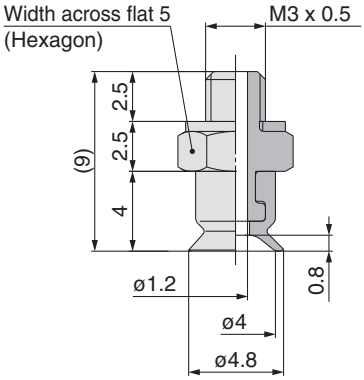

ZP2-TB05MU□-A3

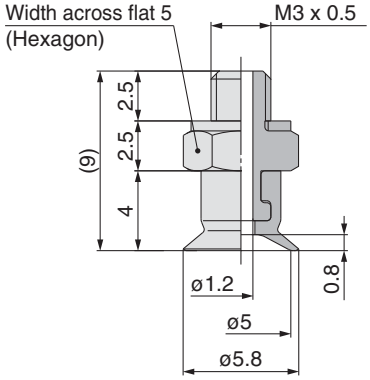

ZP2-TB06MU□-H5

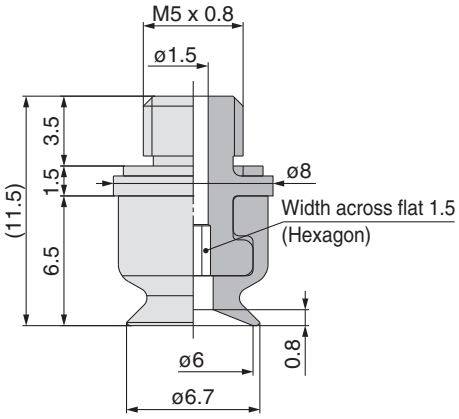

ZP2-TB08MU□-H5

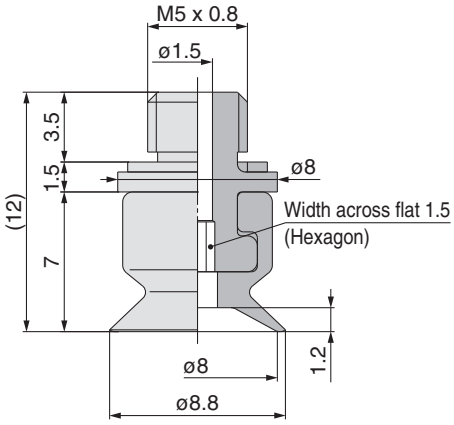

Dimensions: With Adapter

ZP2-TB10MU□-H5

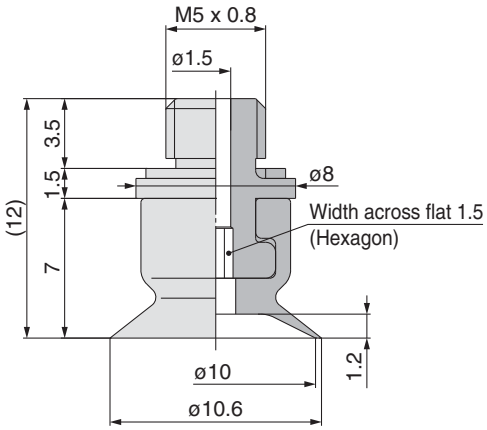

ZP2-TB15MU□-H5

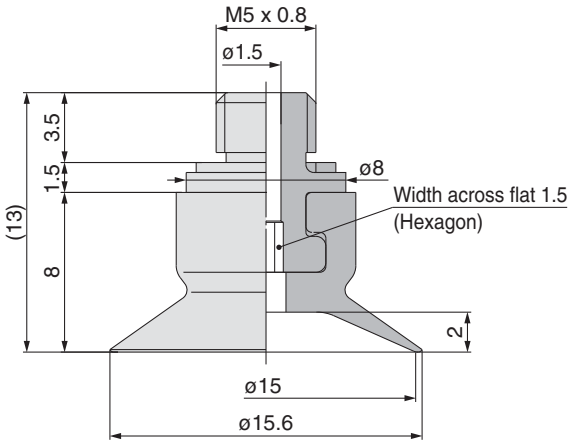

ZP2-TB06MU□-B5

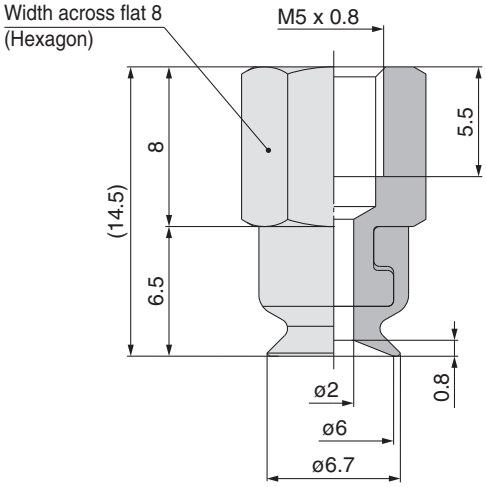

ZP2-TB08MU□-B5

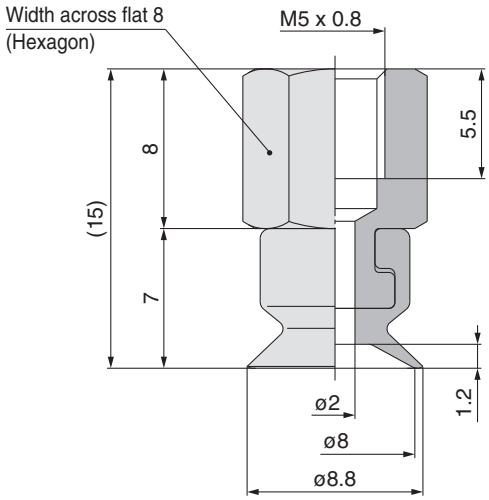

ZP2-TB10MU□-B5

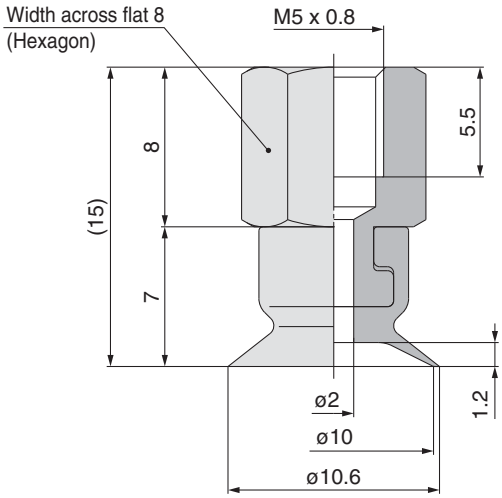

ZP2-TB15MU□-B5

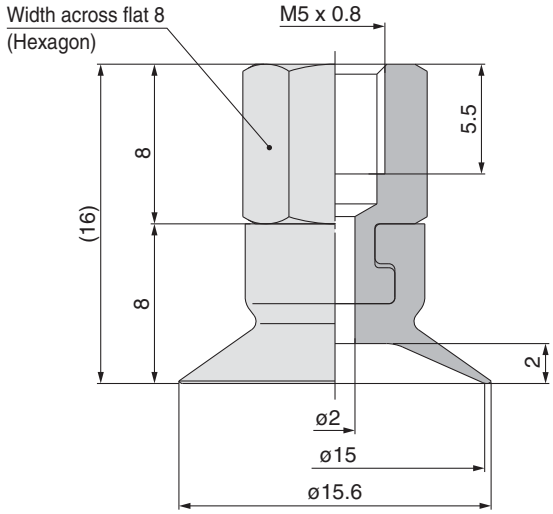

Short-type Pad

Pad diameter ø2, ø4, ø6, ø8, ø15

Symbol/Type
EU: Flat

■Space-saving in the height direction

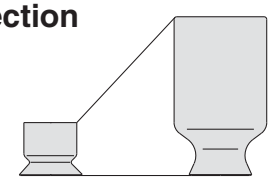

How to Order

Pad unit ZP2 – B02 EU N

Pad diameter

Symbol	Pad diameter	Blast type
B02	ø2	●
B04	ø4	●
B06	ø6	●
08	ø8	—
15	ø15	—

∗ Blast type: Workpieces can be removed easily.

Pad material

Symbol	Material
N	NBR
S	Silicone rubber
U	Urethane rubber
F	FKM
GN	Conductive NBR
GS	Conductive silicone rubber

Pad type

Symbol	Type
EU	Flat

Dimensions: Pad Unit

ZP2-B02EU□

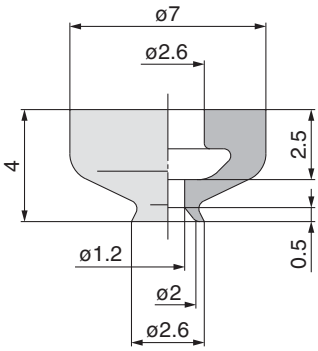

ZP2-B04EU□

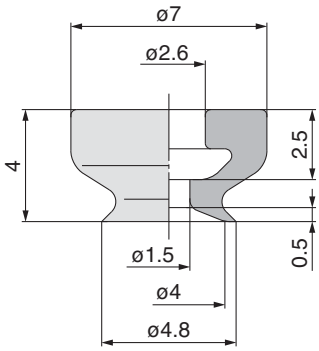

ZP2-B06EU□

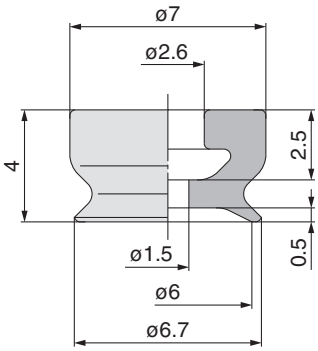

ZP2-08EU□

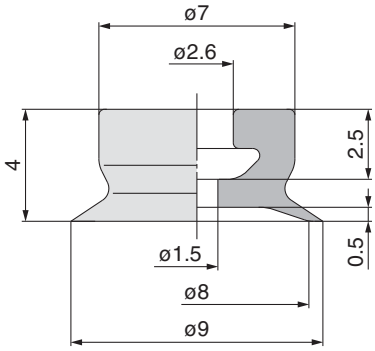

ZP2-15EU□

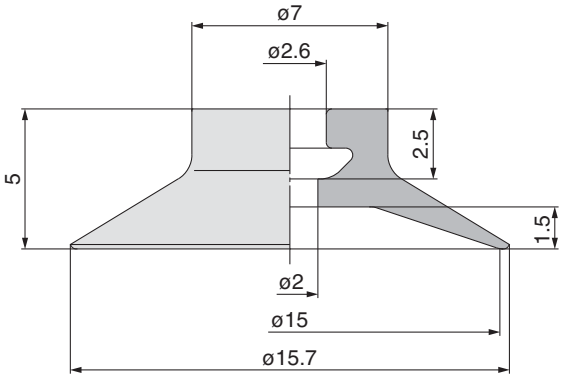

Adapter Mounting Dimensions

If an adapter is made by the customer, design the adapter with the dimensions shown below.

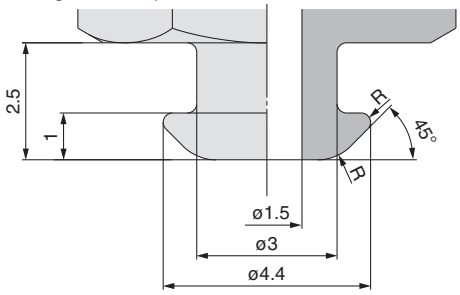

Note) R part has to be smooth with no corners.

∗ Refer to page 70 for adapter applicable to the ZP2 series.

How to Order

With adapter **ZP2 – T B02 EU N – A5**

Vacuum inlet direction

Symbol	Direction
T	Vertical

Pad diameter

Symbol	Pad diameter	Blast type
B02	ø2	●
B04	ø4	●
B06	ø6	●
08	ø8	—
15	ø15	—

∗ Blast type: Workpieces can be removed easily.

Pad type

Symbol	Type
EU	Flat

Pad material

Symbol	Material
N	NBR
S	Silicone rubber
U	Urethane rubber
F	FKM
GN	Conductive NBR
GS	Conductive silicone rubber

Mounting

Symbol	Thread size	Adapter type
A5	M5 x 0.8	Hexagon O.D.
H5	M5 x 0.8	Hexagon socket head

Replacement Part No.

Model	Pad unit part no.	Adapter part no.
ZP2-TB02EU□-A5	ZP2-B02EU□	ZP2A-Z01P
ZP2-TB04EU□-A5	ZP2-B04EU□	
ZP2-TB06EU□-A5	ZP2-B06EU□	
ZP2-T08EU□-A5	ZP2-08EU□	
ZP2-T15EU□-A5	ZP2-15EU□	
ZP2-TB02EU□-H5	ZP2-B02EU□	ZP2A-Z02P
ZP2-TB04EU□-H5	ZP2-B04EU□	
ZP2-TB06EU□-H5	ZP2-B06EU□	
ZP2-T08EU□-H5	ZP2-08EU□	
ZP2-T15EU□-H5	ZP2-15EU□	

Note) □ in the table indicates the pad material.

Dimensions: With Adapter

ZP2-TB02EU□-A5

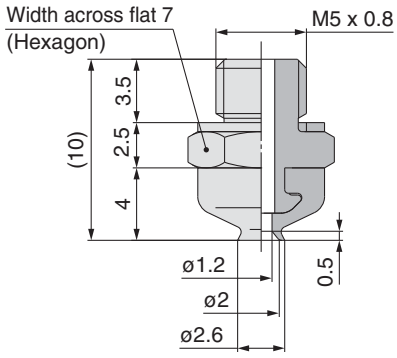

ZP2-TB04EU□-A5

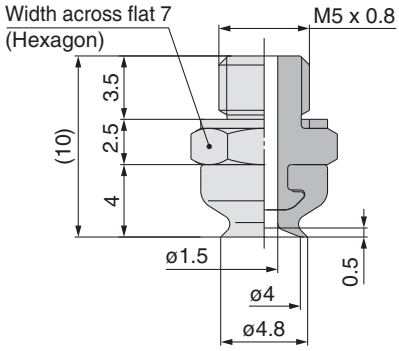

ZP2-TB06EU□-A5

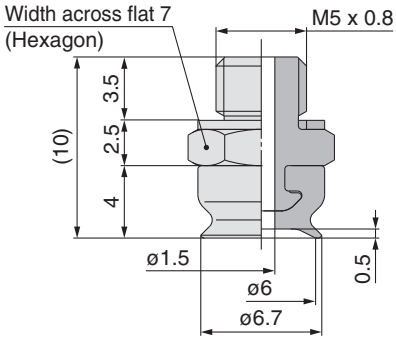

ZP2-T08EU□-A5

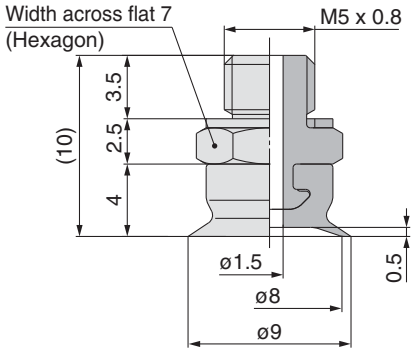

ZP2-T15EU□-A5

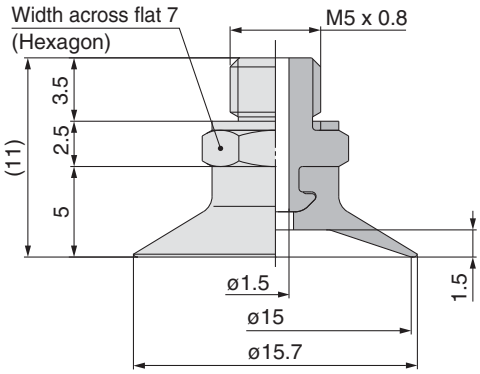

Dimensions: With Adapter

ZP2-TB02EU□-H5

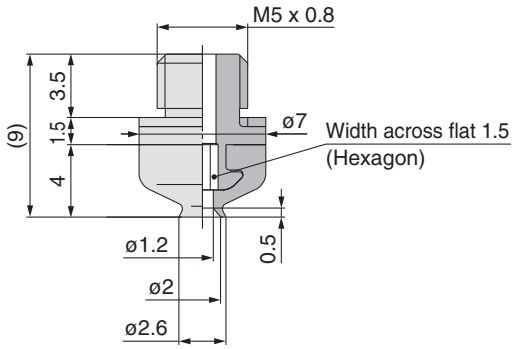

ZP2-TB04EU□-H5

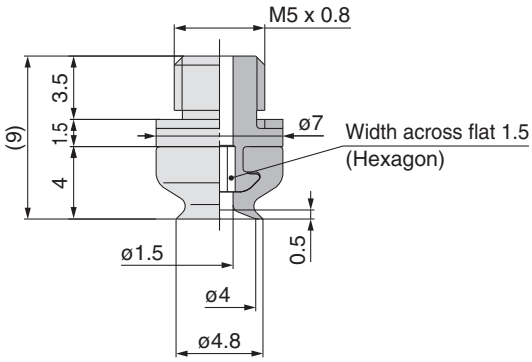

ZP2-TB06EU□-H5

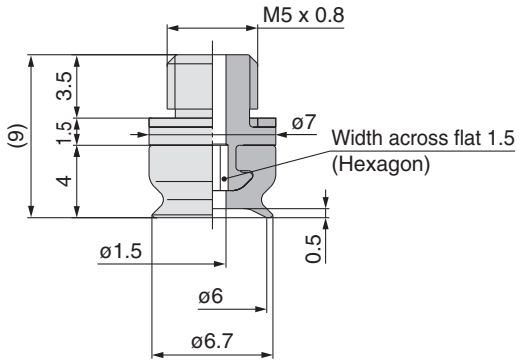

ZP2-T08EU□-H5

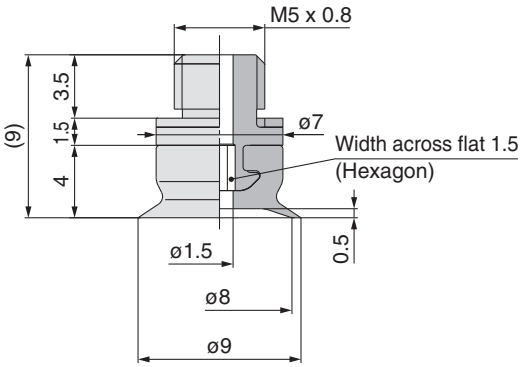

ZP2-T15EU□-H5

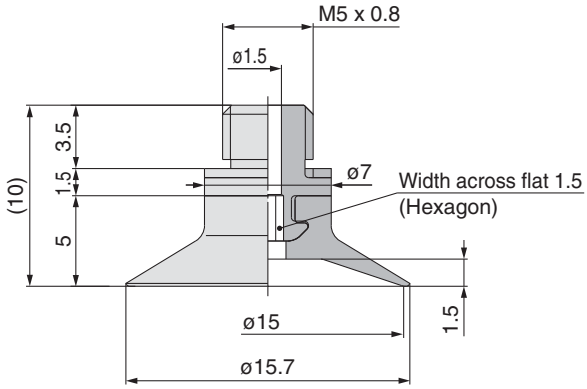

Short-type Pad

Pad diameter ø2, ø3, ø4, ø6, ø8

Symbol/Type
AU: Flat

■**Space-saving in the height direction**

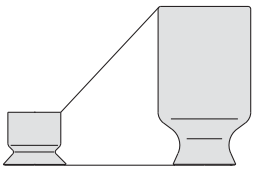

How to Order

Pad unit ZP2 − 02 AU N

Pad diameter

Symbol	Pad diameter	Blast type
02	ø2	—
03	ø3	—
04	ø4	—
06	ø6	—
B08	ø8	●

∗ Blast type: Workpieces can be removed easily.

Pad material

Symbol	Material
N	NBR
S	Silicone rubber
U	Urethane rubber
F	FKM
GN	Conductive NBR
GS	Conductive silicone rubber

Pad type

Symbol	Type
AU	Flat

Dimensions: Pad Unit

ZP2-02AU□

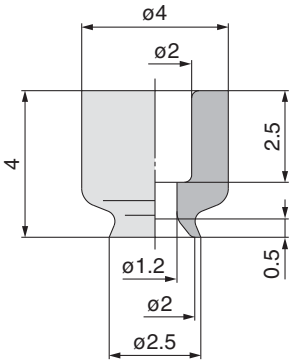

ZP2-03AU□

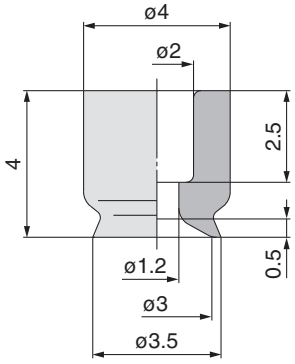

ZP2-04AU□

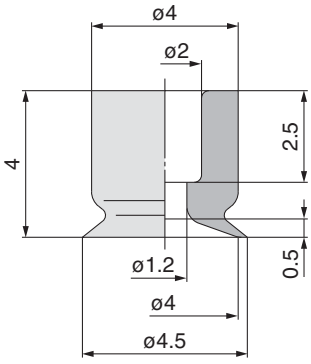

ZP2-06AU□

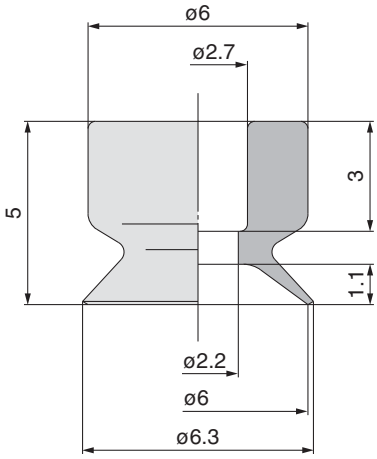

ZP2-B08AU□

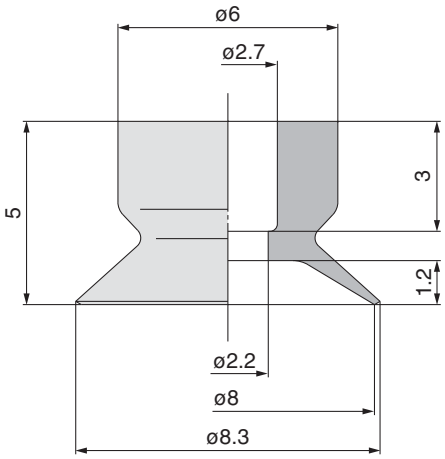

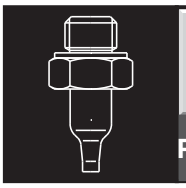

Nozzle Pad

Pad diameter ø0.8, ø1.1

Symbol/Type
AN: Nozzle

■**For adsorption of small pieces (such as IC chips)**

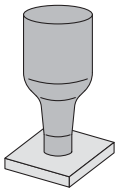

How to Order

Pad unit ZP2 − 08 AN N

Pad diameter

Symbol	Pad diameter
08	ø0.8
11	ø1.1

Pad type

Symbol	Type
AN	Nozzle

Pad material

Symbol	Material
N	NBR
S	Silicone rubber
U	Urethane rubber
F	FKM
GN	Conductive NBR
GS	Conductive silicone rubber

Dimensions: Pad Unit

ZP2-08AN□

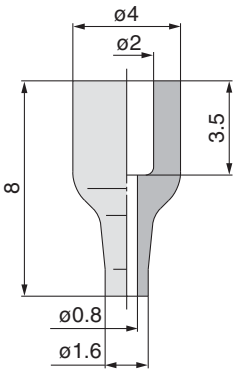

ZP2-11AN□

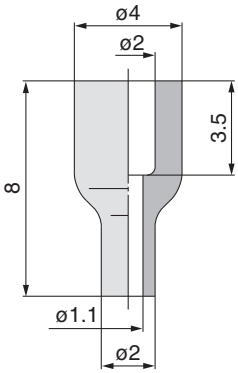

Adapter Mounting Dimensions

If an adapter is made by the customer, design the adapter with the dimensions shown below.

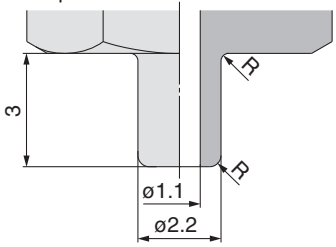

Note) R part has to be smooth with no corners.
∗ Refer to page 70 for adapter applicable to the ZP2 series.

How to Order

With adapter ZP2 − T 08 AN N − A5

Vacuum entry direction

Symbol	Direction
T	Vertical

Pad diameter

Symbol	Pad diameter
08	ø0.8
11	ø1.1

Pad type

Symbol	Type
AN	Nozzle

Pad material

Symbol	Material
N	NBR
S	Silicone rubber
U	Urethane rubber
F	FKM
GN	Conductive NBR
GS	Conductive silicone rubber

Mounting

Symbol	Thread size
A5	M5 x 0.8

Replacement Part No.

Model	Pad unit part no.	Adapter part no.
ZP2-T08AN□-A5	ZP2-08AN□	ZP2A-Z21P
ZP2-T11AN□-A5	ZP2-11AN□	

Note) □ Indicates the pad material.

Dimensions: With Adapter

ZP2-T08AN□-A5

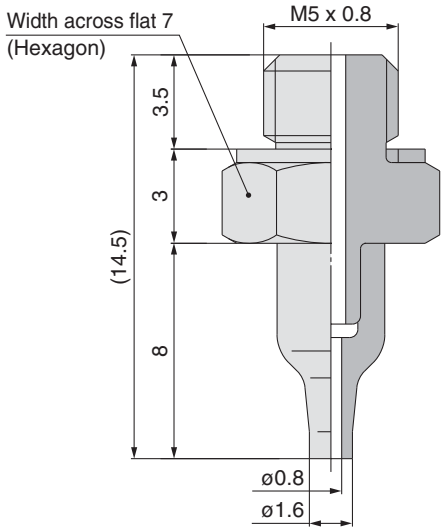

ZP2-T11AN□-A5

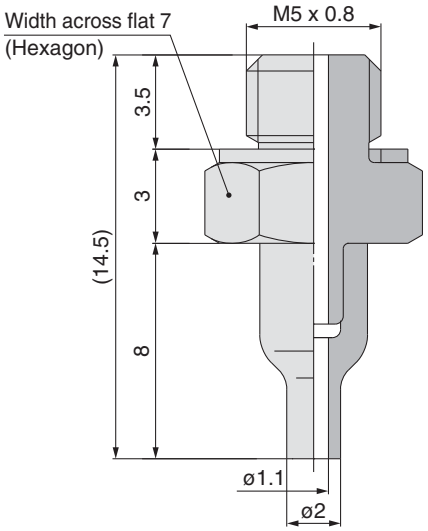

Thin Flat Pad

Pad diameter ø5, ø6, ø11, ø14, ø18, ø20

Symbol/Type

UT: Thin flat (Skirt)

■**For adsorption of soft workpieces such as thin sheets or vinyl. Wrinkling or deformation during adsorption is reduced.**

■**Applicable for the ZP series adapter**

How to Order

Pad unit **ZP2 – 11 UT N**

Pad diameter

Symbol	Pad diameter
05	ø5
06	ø6
11	ø11
14	ø14
18	ø18
20	ø20

Pad type

Symbol	Type
UT	Thin flat (Skirt)

Pad material

Symbol	Material
N	NBR
S	Silicone rubber
U	Urethane rubber
F	FKM
GN	Conductive NBR
GS	Conductive silicone rubber

Dimensions: Pad Unit

ZP2-05UT□

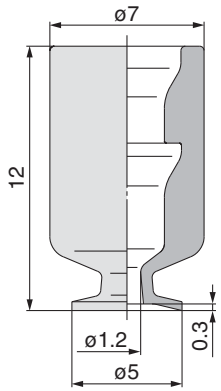

ZP2-06UT□

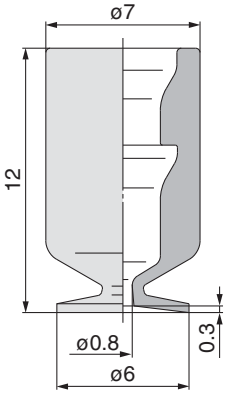

ZP2-11UT□

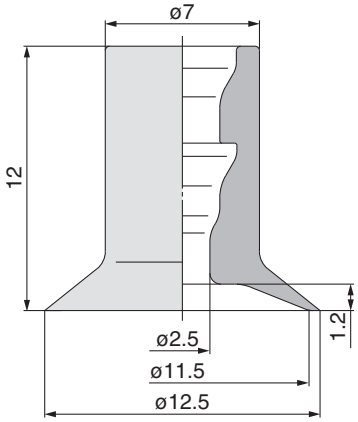

ZP2-14UT□

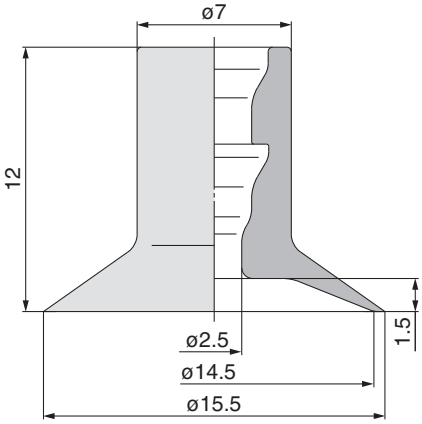

ZP2-18UT□

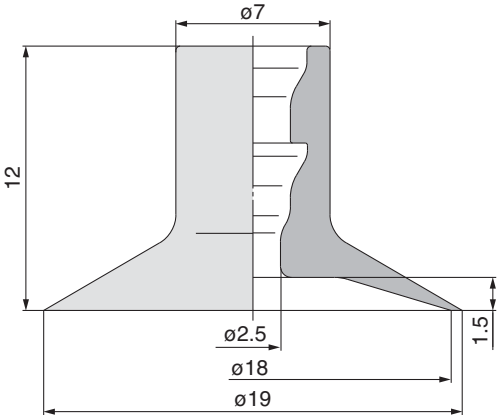

ZP2-20UT□

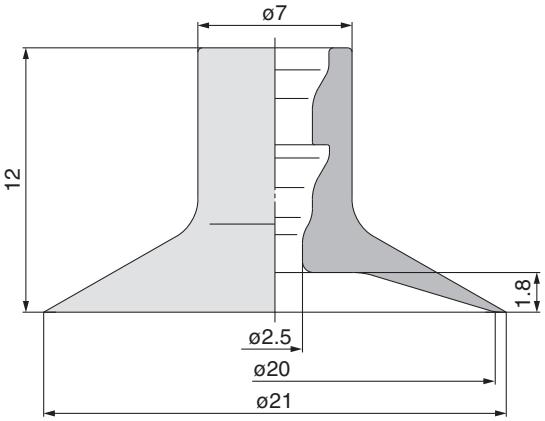

Adapter Mounting Dimensions

If an adapter is made by the customer, design the adapter with the dimensions shown below.

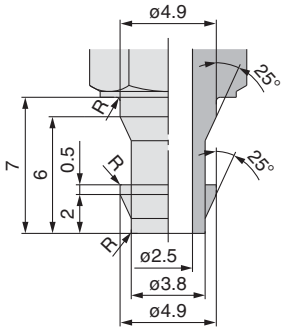

Note) R part has to be smooth with no corners.

∗ Refer to page 66 for adapter applicable to the ZP series.

Flat Pad

Pad diameter ø10, ø15, ø20, ø25, ø30

Symbol/Type

MT: Thin flat (with groove)

■ Adsorption surface with groove

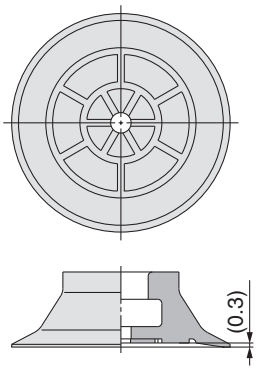

How to Order

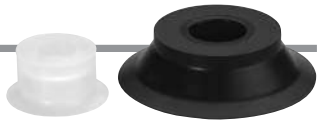

Pad unit ZP2 − B10 MT N

Pad diameter

Symbol	Pad diameter	Blast type
B10	ø10	●
B15	ø15	●
B20	ø20	●
B25	ø25	●
B30	ø30	●

∗ Blast type: Workpieces can be removed easily.

Pad material

Symbol	Material
N	NBR
S	Silicone rubber
F	FKM
GN	Conductive NBR
GS	Conductive silicone rubber

Pad type

Symbol	Type
MT	Thin flat (With groove)

■ For adsorption of thin sheets or film
Deformation of the flat surface during adsorption is reduced.

Note 1) Not suitable for transferring workpieces which apply a load.
Note 2) Wrinkling may be generated depending on the sheet thickness.
Confirm the thickness before use.

Dimensions: Pad Unit

ZP2-B10MT□

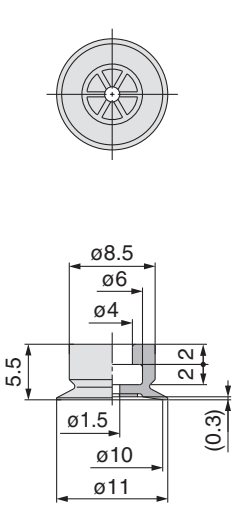

ZP2-B15MT□

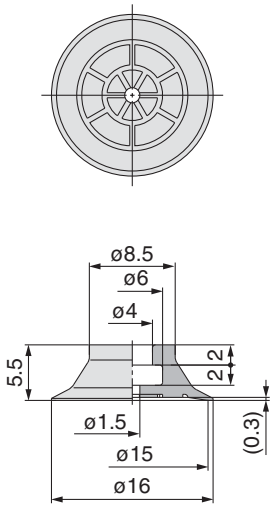

ZP2-B20MT□

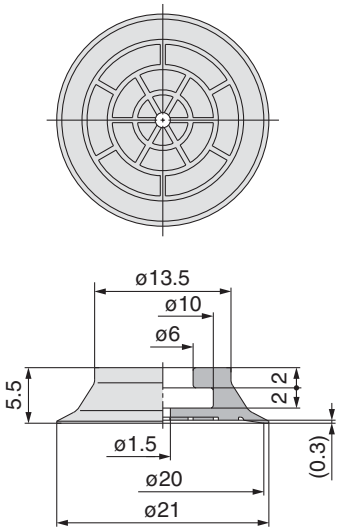

ZP2-B25MT□

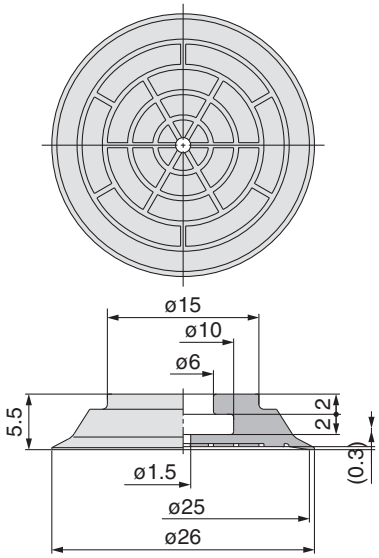

ZP2-B30MT□

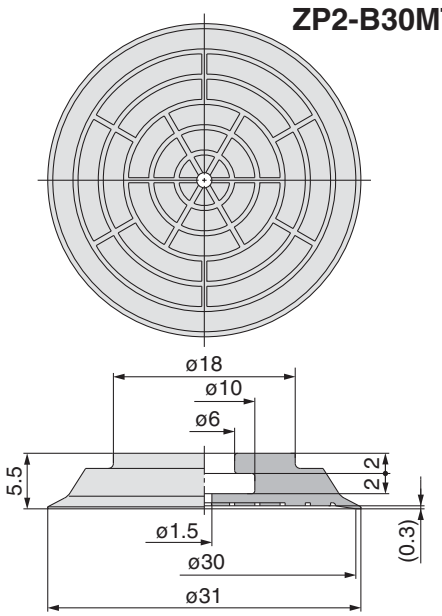

Adapter Mounting Dimensions

If an adapter made by the customer,
design the adapter with the dimensions shown below.

Applicable pad
B10MT/B15MT

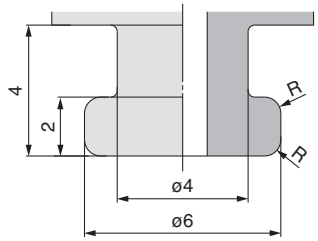

Applicable pad
B20MT/B25MT/B30MT

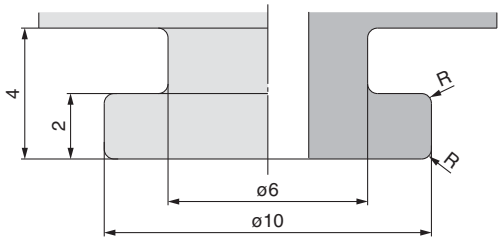

Note) R part has to be smooth with no corners.
∗ Refer to page 69 for adapter applicable to the ZP2 series.

How to Order

With adapter **ZP2 – T B10 MT N – H5**

Vacuum inlet direction

Symbol	Direction
T	Vertical

Pad diameter

Symbol	Pad diameter	Blast type
B10	ø10	●
B15	ø15	●
B20	ø20	●
B25	ø25	●
B30	ø30	●

∗ Blast type: Workpieces can be removed easily.

Pad type

Symbol	Type
MT	Thin flat (With groove)

Pad material

Symbol	Material
N	NBR
S	Silicone rubber
F	FKM
GN	Conductive NBR
GS	Conductive silicone rubber

Mounting

Thread size (Symbol) \ Pad diameter (Symbol)	B10	B15	B20	B25	B30
H5 (M5 x 0.8 Male thread)	●	●	●	●	●
B5 (M5 x 0.8 Female thread)	●	●	—	—	—

Replacement Part No.

Model	Pad unit part no.	Adapter part no.
ZP2-TB10MT□-H5	ZP2-B10MT□	ZP2A-M02
ZP2-TB15MT□-H5	ZP2-B15MT□	
ZP2-TB20MT□-H5	ZP2-B20MT□	ZP2A-M03
ZP2-TB25MT□-H5	ZP2-B25MT□	
ZP2-TB30MT□-H5	ZP2-B30MT□	
ZP2-TB10MT□-B5	ZP2-B10MT□	ZP2A-M04
ZP2-TB15MT□-B5	ZP2-B15MT□	

Note) □ in the table indicates the pad material.

Dimensions: With Adapter

ZP2-TB10MT□-H5

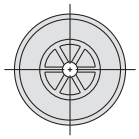

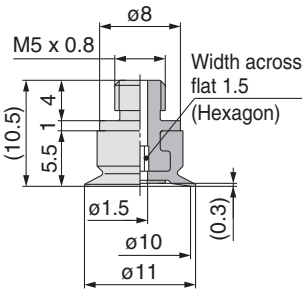

ZP2-TB15MT□-H5

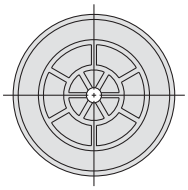

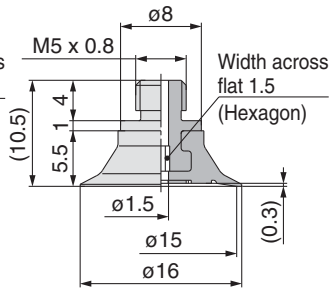

ZP2-TB20MT□-H5

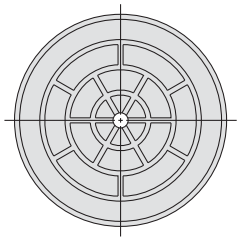

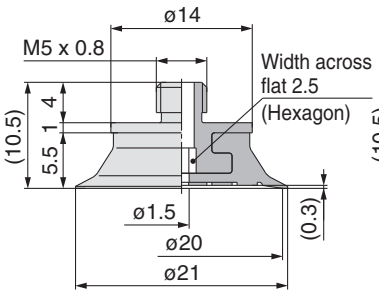

ZP2-TB25MT□-H5

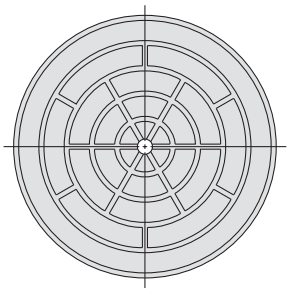

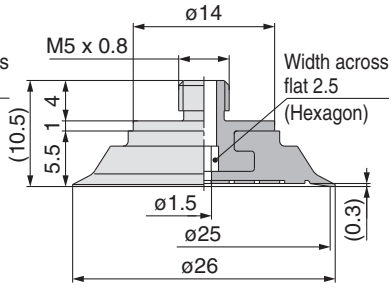

ZP2-TB30MT□-H5

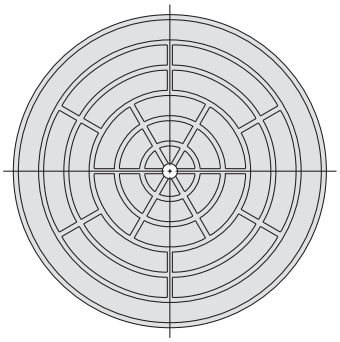

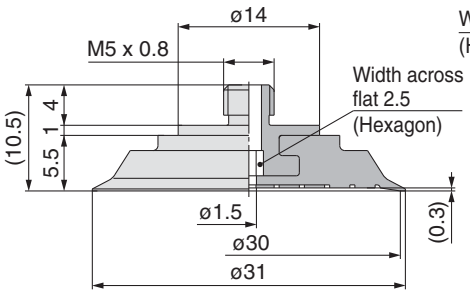

ZP2-TB10MT□-B5

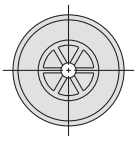

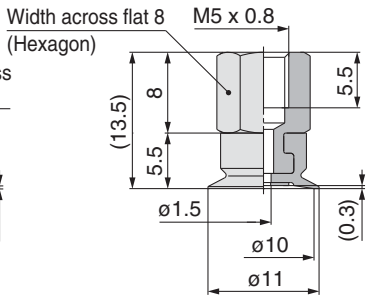

ZP2-TB15MT□-B5

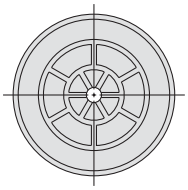

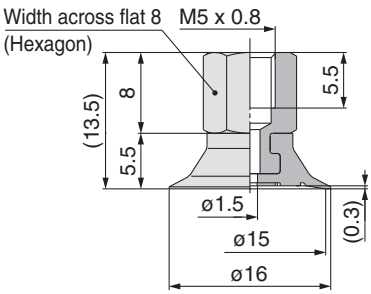

Bellows Pad

Pad diameter ø6, ø9, ø10, ø14, ø15, ø16, ø25, ø30

Symbol/Type

J: Bellows (Multistage type)

- **For use where there is no space for the buffer (spring type)**
- **Workpieces with inclined adsorption surface**
- **Applicable for the ZP series adapter**

How to Order

Pad unit ZP2 – 06 J N – X19

Pad diameter

Symbol	Pad diameter	Blast type
06	ø6	—
09	ø9	—
B10	ø10	●
14	ø14	—
B15	ø15	●
16	ø16	—
B25	ø25	●
B30	ø30	●

∗ Blast type: Workpieces can be removed easily.

Pad material

Symbol	Material
N	NBR
S	Silicone rubber
U	Urethane rubber
F	FKM
GN	Conductive NBR
GS	Conductive silicone rubber

Pad type

Symbol	Type
J	Bellows (Multistage type)

With/Without lock ring

—	With lock ring
X19	Without lock ring Note)

Note) ø6, ø10, ø15 are not available.

Dimensions: Pad Unit

ZP2-06J□

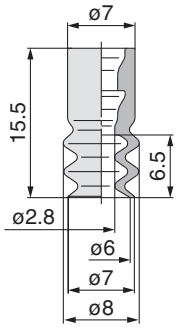

ZP2-09J□

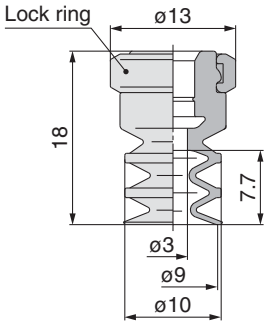

ZP2-B10J□

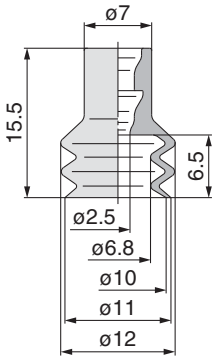

ZP2-14J□

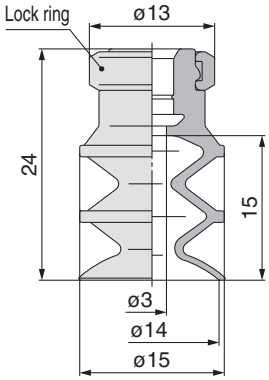

ZP2-B15J□

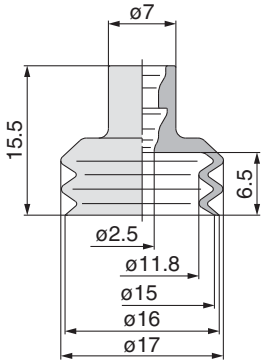

ZP2-16J□

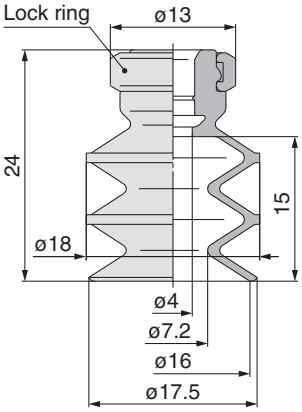

ZP2-B25J□

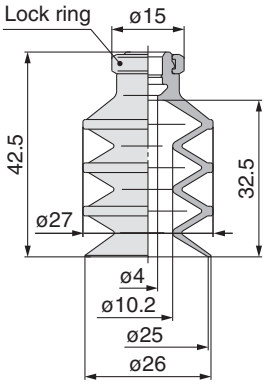

ZP2-B30J□

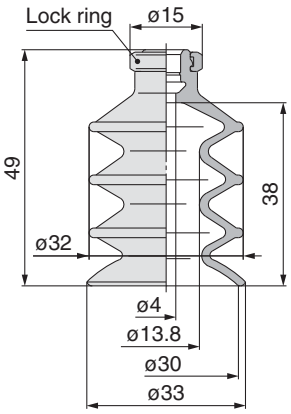

Adapter Mounting Dimensions

If an adapter is made by the customer, design the adapter with the dimensions shown below.

Applicable pad 06J/B10J/B15J

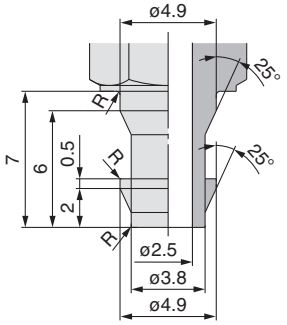

Applicable pad 09J/14J/16J

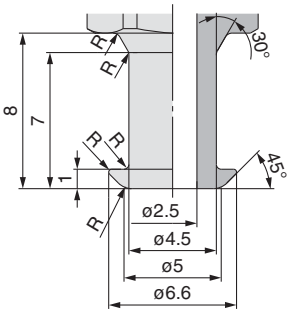

Applicable pad B25J/B30J

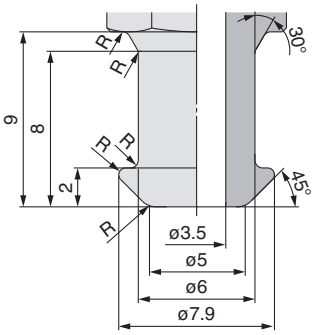

Note) R part has to be smooth with no corners.

∗ Refer to page 66 for adapter applicable to the ZP2 series.

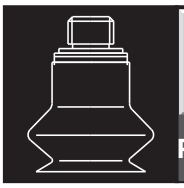

Bellows Pad

Pad diameter ø4, ø6, ø8, ø10, ø15, ø20

Symbol/Type

MB: Bellows

■For use where there is no space for the buffer (spring type)

■Workpieces with inclined adsorption surface

How to Order

Pad unit ZP2 − B04 MB N

Pad diameter

Symbol	Pad diameter	Blast type
B04	ø4	●
B06	ø6	●
B08	ø8	●
B10	ø10	●
B15	ø15	●
B20	ø20	●

Pad type

Symbol	Type
MB	Bellows

Pad material

Symbol	Material
N	NBR
S	Silicone rubber
U	Urethane rubber
F	FKM
GN	Conductive NBR
GS	Conductive silicone rubber

∗ Blast type: Workpieces can be removed easily.

Dimensions: Pad Unit

ZP2-B04MB□

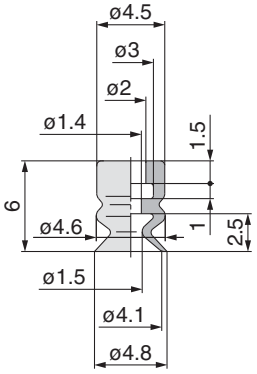

ZP2-B06MB□

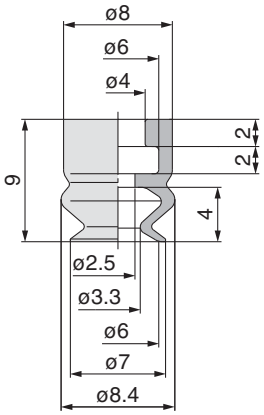

ZP2-B08MB□

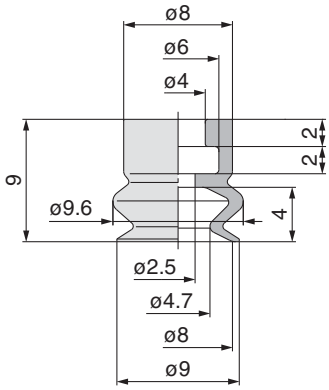

ZP2-B10MB□

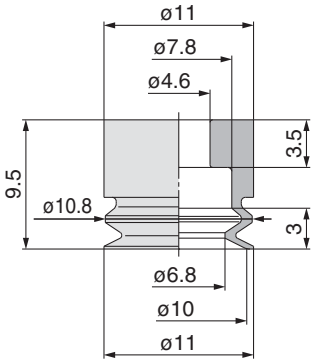

ZP2-B15MB□

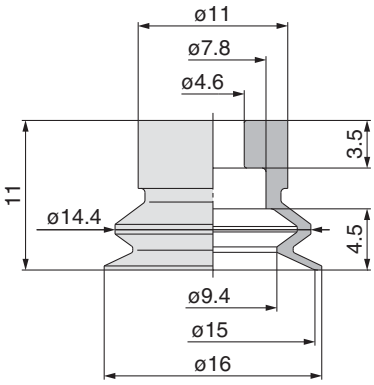

ZP2-B20MB□

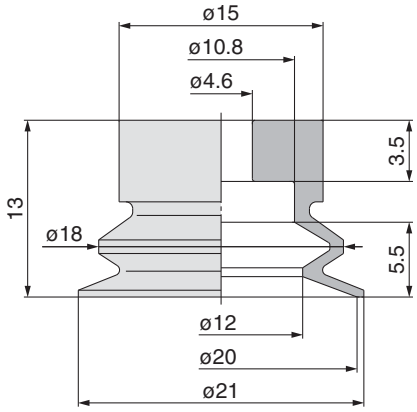

Adapter Mounting Dimensions

If an adapter is made by the customer, design the adapter with the dimensions shown below.

Applicable pad B04MB

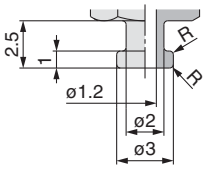

Applicable pad B06MB/B08MB

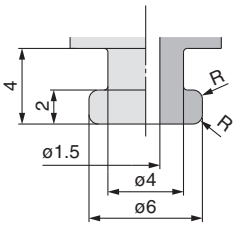

Applicable pad B10MB/B15MB

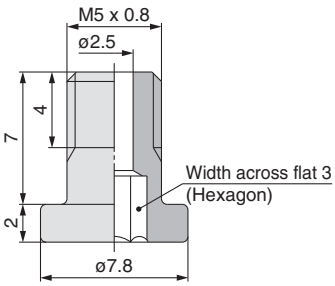

Applicable pad B20MB

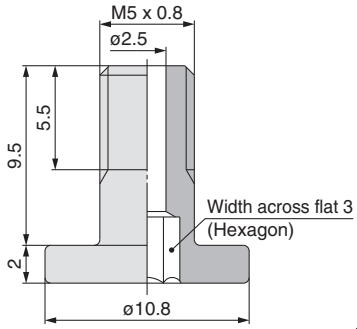

Note) R part has to be smooth with no corners.

∗ Refer to pages 69 and 70 for adapter applicable to the ZP2 series.

How to Order

With adapter **ZP2 – T B04 MB N – A3**

Vacuum inlet direction

Symbol	Direction
T	Vertical

Pad diameter

Symbol	Pad diameter	Blast type
B04	ø4	●
B06	ø6	●
B08	ø8	●
B10	ø10	●
B15	ø15	●
B20	ø20	●

∗ Blast type: Workpieces can be removed easily.

Pad material

Symbol	Material
N	NBR
S	Silicone rubber
U	Urethane rubber
F	FKM
GN	Conductive NBR
GS	Conductive silicone rubber

Pad type

Symbol	Type
MB	Bellows

Mounting

Thread size (Symbol) \ Pad diameter (Symbol)	B04	B06	B08	B10	B15	B20
A3 (M3 x 0.5 Male thread)	●	—	—	—	—	—
H5 (M5 x 0.8 Male thread)	—	●	●	●	●	●
B5 (M5 x 0.8 Female thread)	—	●	●	—	—	—

Replacement Part No.

Model	Pad unit part no.	Adapter part no.
ZP2-TB04MB□-A3	ZP2-B04MB□	ZP2A-M01P
ZP2-TB06MB□-H5	ZP2-B06MB□	ZP2A-M02P
ZP2-TB08MB□-H5	ZP2-B08MB□	
ZP2-TB10MB□-H5	ZP2-B10MB□	ZP2A-M05
ZP2-TB15MB□-H5	ZP2-B15MB□	
ZP2-TB20MB□-H5	ZP2-B20MB□	ZP2A-M06
ZP2-TB06MB□-B5	ZP2-B06MB□	ZP2A-M04
ZP2-TB08MB□-B5	ZP2-B08MB□	

Note) □ Indicates the pad material.

Dimensions: With Adapter

ZP2-TB04MB□□-A3

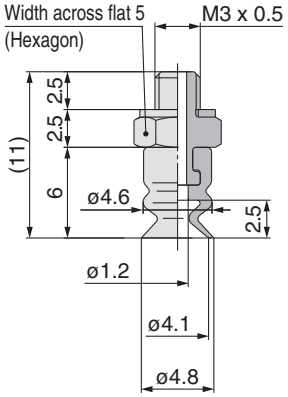

ZP2-TB06MB□-H5

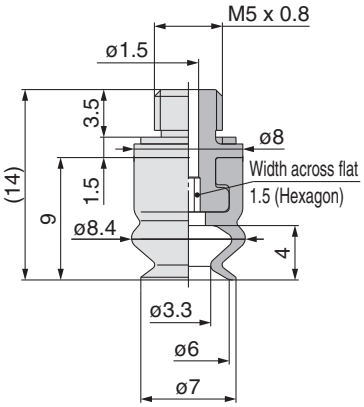

ZP2-TB08MB□-H5

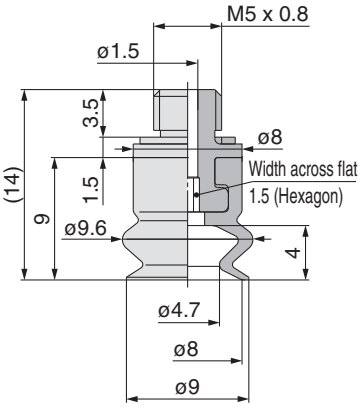

ZP2-TB10MB□-H5

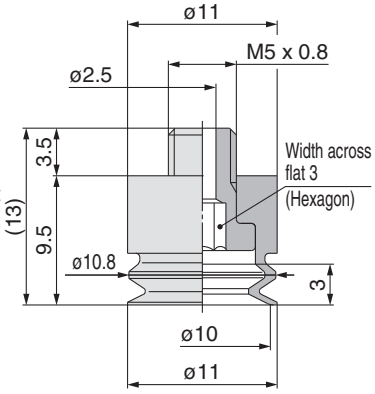

ZP2-TB15MB□-H5

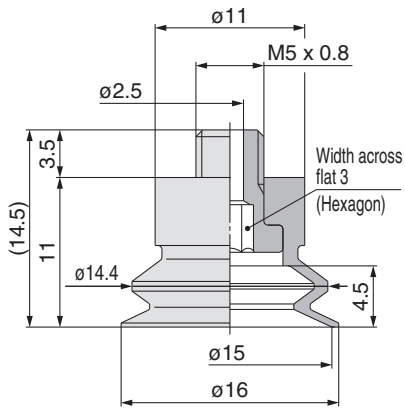

ZP2-TB20MB□-H5

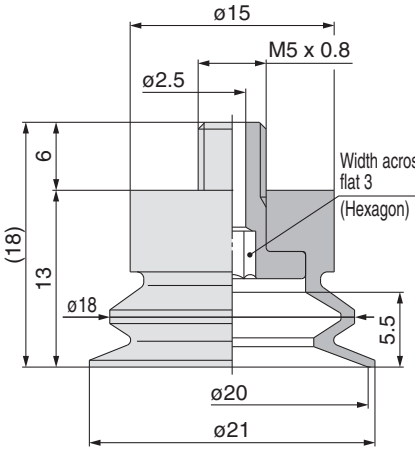

ZP2-TB06MB□-B5

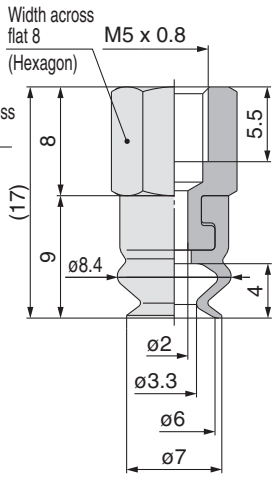

ZP2-TB08MB□-B5

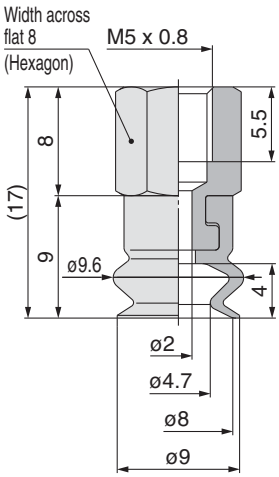

Bellows Pad

Pad diameter ø2, ø4, ø5, ø6, ø40, ø46

Symbol/Type

ZJ: Bellows

■For use where there is no space for the buffer (spring type)

■Workpieces with inclined adsorption surface

How to Order

Pad unit ZP2 – 02 ZJ N

Pad diameter

Symbol	Pad diameter
02	ø2
04	ø4
05	ø5
06	ø6
40	ø40
46	ø46

Pad material

Symbol	Material
N	NBR
S	Silicone rubber
U	Urethane rubber
F	FKM
GN	Conductive NBR
GS	Conductive silicone rubber

Pad type

Symbol	Type
ZJ	Bellows

Dimensions: Pad Unit

ZP2-02ZJ□

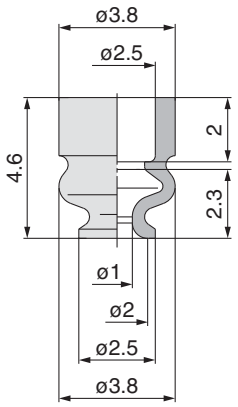

ZP2-04ZJ□

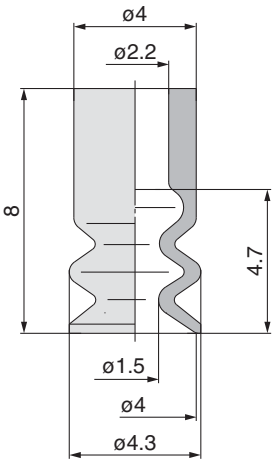

ZP2-05ZJ□

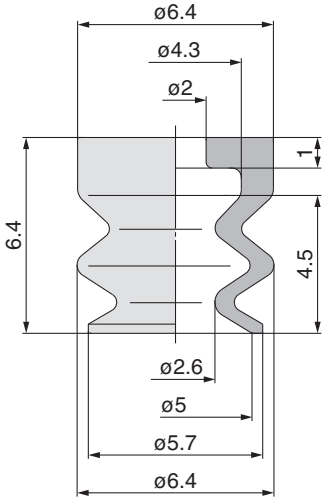

ZP2-06ZJ□

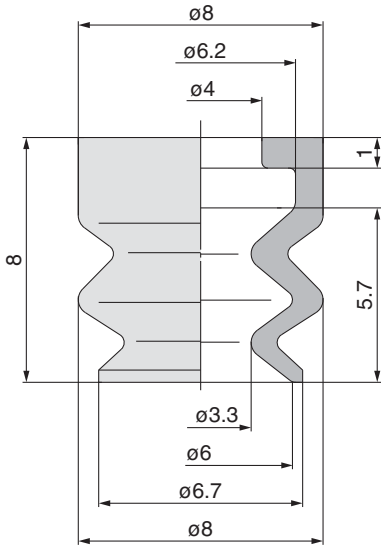

ZP2-40ZJ□□

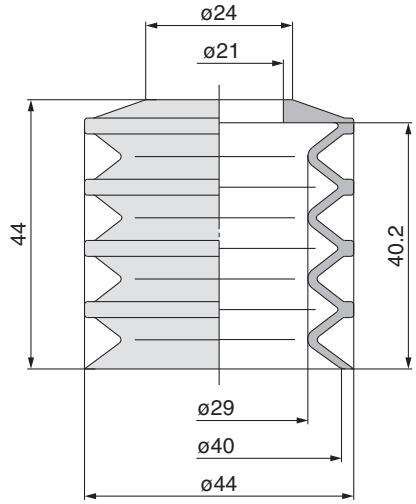

ZP2-46ZJ□□

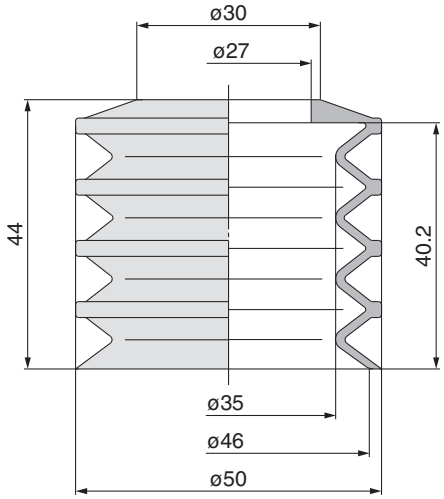

Oval Pad

Pad size 3.5 x 7 to 8 x 30

Symbol/Type
W: Oval

■**For workpieces with limitations on the adsorption surface**

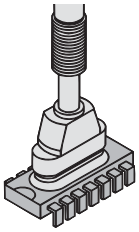

How to Order

Pad unit ZP2 − 3507 W N

Pad size

Symbol	Size	Symbol	Size
3507	3.5 x 7	6020	6 x 20
4010	4 x 10	8020	8 x 20
5010	5 x 10	4030	4 x 30
6010	6 x 10	5030	5 x 30
4020	4 x 20	6030	6 x 30
5020	5 x 20	8030	8 x 30

Pad material

Symbol	Material
N	NBR
S	Silicone rubber
U	Urethane rubber
F	FKM
GN	Conductive NBR
GS	Conductive silicone rubber

Pad type

Symbol	Type
W	Oval

Dimensions: Pad Unit

ZP2-□W□

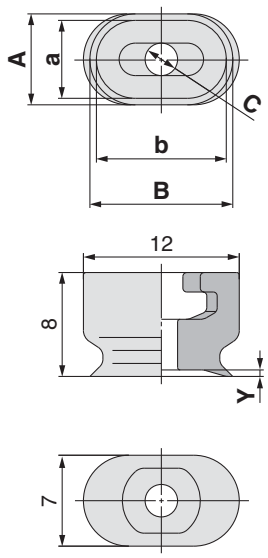

ZP2-20W□

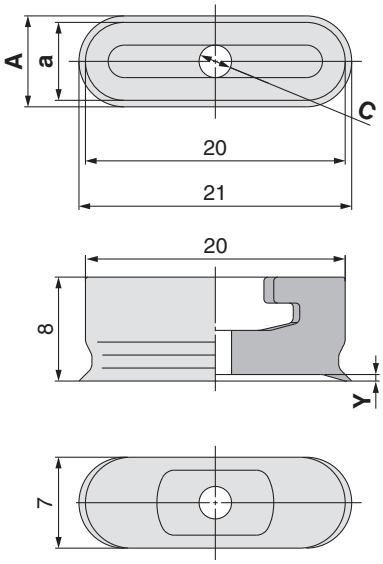

ZP2-30W□

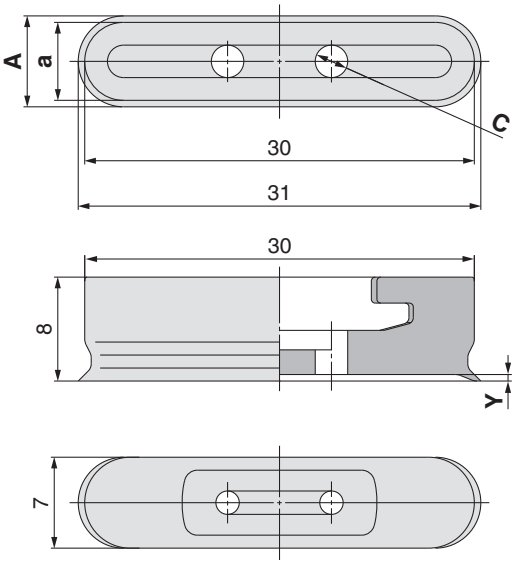

Dimensions

Model	a	A	b	B	C	Y
ZP2-3507W□	3.5	4.5	7	8	2 x 1.5	0.5
ZP2-4010W□	4	5	10	11	2.5	
ZP2-5010W□	5	6				
ZP2-6010W□	6	7				

Dimensions

Model	a	A	C	Y
ZP2-4020W□	4	5	2 x 1.8	0.5
ZP2-5020W□	5	6	2 x 2	
ZP2-6020W□	6	7	2.5	
ZP2-8020W□	8	9	3	0.8

Dimensions

Model	a	A	C	Y
ZP2-4030W□	4	5	2 x 1.8	0.5
ZP2-5030W□	5	6	2 x 2.5	
ZP2-6030W□	6	7		0.8
ZP2-8030W□	8	9		

Adapter Mounting Dimensions

If an adapter is made by the customer, design the adapter with the dimensions shown below.

Applicable pad 3507W/4010W/5010W/6010W

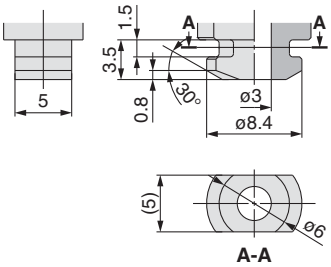

Applicable pad 4020W/5020W/6020W/8020W

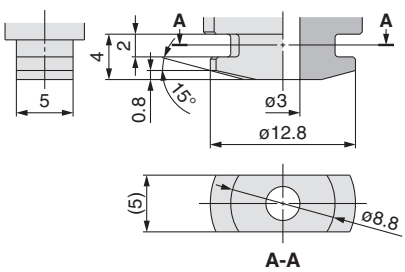

Applicable pad 4030W/5030W/6030W/8030W

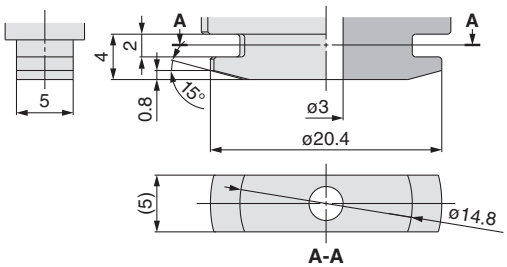

Note) R part has to be smooth with no corners.

∗ Refer to page 69 for adapter applicable to the ZP2 series.

How to Order

With adapter **ZP2 – T 3507 W N – B5**

Vacuum inlet direction

Symbol	Direction
T	Vertical

Pad size

Symbol	Size	Symbol	Size
3507	3.5 x 7	6020	6 x 20
4010	4 x 10	8020	8 x 20
5010	5 x 10	4030	4 x 30
6010	6 x 10	5030	5 x 30
4020	4 x 20	6030	6 x 30
5020	5 x 20	8030	8 x 30

Pad type

Symbol	Type
W	Oval

Pad material

Symbol	Material
N	NBR
S	Silicone rubber
U	Urethane rubber
F	FKM
GN	Conductive NBR
GS	Conductive silicone rubber

Vacuum inlet

Symbol	Thread size
B5	M5 x 0.8

Replacement Part No.

Model	Pad unit part no.	Adapter part no.
ZP2-T3507W□-B5	ZP2-3507W□	ZP2A-001
ZP2-T4010W□-B5	ZP2-4010W□	
ZP2-T5010W□-B5	ZP2-5010W□	
ZP2-T6010W□-B5	ZP2-6010W□	
ZP2-T4020W□-B5	ZP2-4020W□	ZP2A-002
ZP2-T5020W□-B5	ZP2-5020W□	
ZP2-T6020W□-B5	ZP2-6020W□	
ZP2-T8020W□-B5	ZP2-8020W□	
ZP2-T4030W□-B5	ZP2-4030W□	ZP2A-003
ZP2-T5030W□-B5	ZP2-5030W□	
ZP2-T6030W□-B5	ZP2-6030W□	
ZP2-T8030W□-B5	ZP2-8030W□	

Note) □ Indicates the pad material.

Dimensions: With Adapter

ZP2-T W□-B5

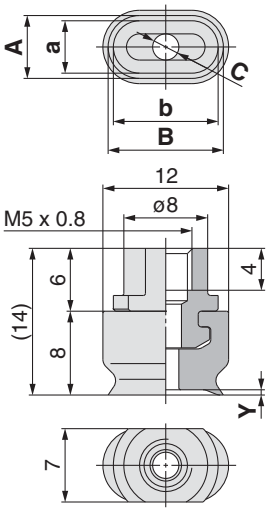

Dimensions

Model	a	A	b	B	C	Y
ZP2-T3507W□-B5	3.5	4.5	7	8	2 x 1.5	0.5
ZP2-T4010W□-B5	4	5	10	11		
ZP2-T5010W□-B5	5	6			2.5	
ZP2-T6010W□-B5	6	7				

ZP2-T 20 W□-B5

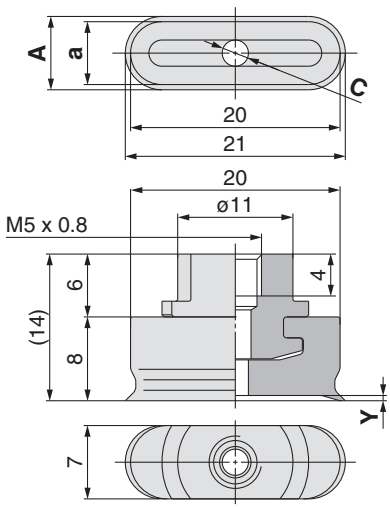

Dimensions

Model	a	A	C	Y
ZP2-T4020W□-B5	4	5	2 x 1.8	
ZP2-T5020W□-B5	5	6	2 x 2	0.5
ZP2-T6020W□-B5	6	7	2.5	
ZP2-T8020W□-B5	8	9	3	0.8

ZP2-T 30 W□-B5

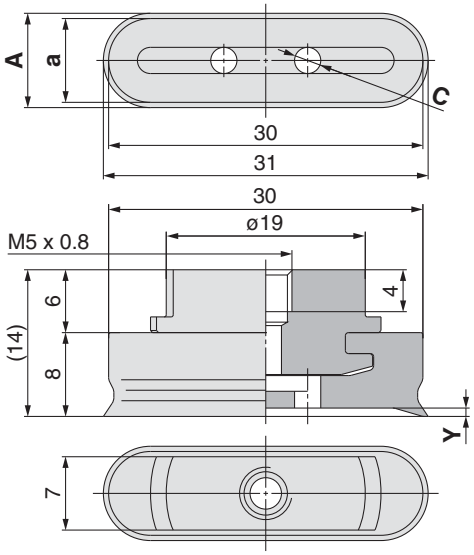

Dimensions

Model	a	A	C	Y
ZP2-T4030W□-B5	4	5	2 x 1.8	
ZP2-T5030W□-B5	5	6	2 x 2.5	0.5
ZP2-T6030W□-B5	6	7		
ZP2-T8030W□-B5	8	9		0.8

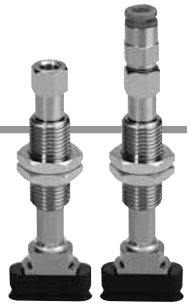

How to Order

With buffer ZP2 – T 3507 W N K 10 – B5

Vacuum inlet direction

Symbol	Direction
T	Vertical

Pad size

Symbol	Size	Symbol	Size
3507	3.5 x 7	6020	6 x 20
4010	4 x 10	8020	8 x 20
5010	5 x 10	4030	4 x 30
6010	6 x 10	5030	5 x 30
4020	4 x 20	6030	6 x 30
5020	5 x 20	8030	8 x 30

Pad material (□)

Symbol	Material
N	NBR
S	Silicone rubber
U	Urethane rubber
F	FKM
GN	Conductive NBR
GS	Conductive silicone rubber

Pad type

Symbol	Type
W	Oval

Buffer specification

Symbol	Specification
K	Non-rotating

Buffer stroke (★)

Symbol	Stroke
10	10 mm
20	20 mm
30	30 mm
40	40 mm
50	50 mm

Vacuum inlet (■)

Symbol	Applicable tube O.D.
B5	M5 x 0.8
04	ø4 one-touch fitting
06	ø6 one-touch fitting

Replacement Part No.

Model	Pad unit part no.	Adapter part no.	Buffer assembly part no.
ZP2-T3507W□K★-■	ZP2-3507W□	ZP2A-001	ZPB2K★-■
ZP2-T4010W□K★-■	ZP2-4010W□		
ZP2-T5010W□K★-■	ZP2-5010W□		
ZP2-T6010W□K★-■	ZP2-6010W□		
ZP2-T4020W□K★-■	ZP2-4020W□	ZP2A-002	
ZP2-T5020W□K★-■	ZP2-5020W□		
ZP2-T6020W□K★-■	ZP2-6020W□		
ZP2-T8020W□K★-■	ZP2-8020W□		
ZP2-T4030W□K★-■	ZP2-4030W□	ZP2A-003	
ZP2-T5030W□K★-■	ZP2-5030W□		
ZP2-T6030W□K★-■	ZP2-6030W□		
ZP2-T8030W□K★-■	ZP2-8030W□		

Buffer stroke

Symbol	Stroke
10	10 mm
20	20 mm
30	30 mm
40	40 mm
50	50 mm

Vacuum inlet

Symbol	Applicable tube O.D.
B5	M5 x 0.8
04	ø4 one-touch fitting
06	ø6 one-touch fitting

Note 1) □ Indicates the pad material.
Note 2) ★ Indicates the buffer stroke.
Note 3) ■ Indicates the vacuum inlet.

Buffer Specifications

Stroke (mm)		10, 20, 30, 40, 50
Spring reactive force	At 0 stroke (N)	1.0
	At buffer stroke (N)	3.0
Tightening torque		3.0 N·m 5%

Dimensions: With Buffer

ZP2-T□□□W□K★-B5

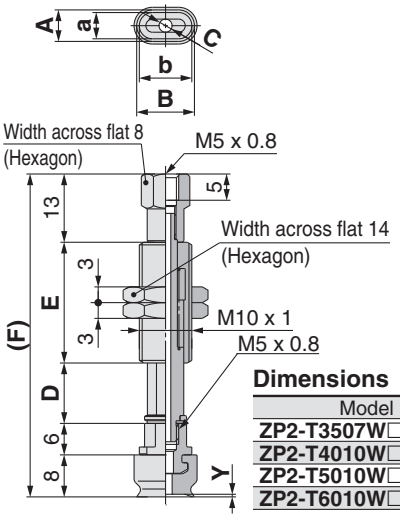

Dimensions

Model	a	A	b	B	C	Y
ZP2-T3507W□K★-B5	3.5	4.5	7	8	2 x 1.5	0.5
ZP2-T4010W□K★-B5	4	5	10	11		
ZP2-T5010W□K★-B5	5	6			2.5	
ZP2-T6010W□K★-B5	6	7				

ZP2-T□20W□K★-B5

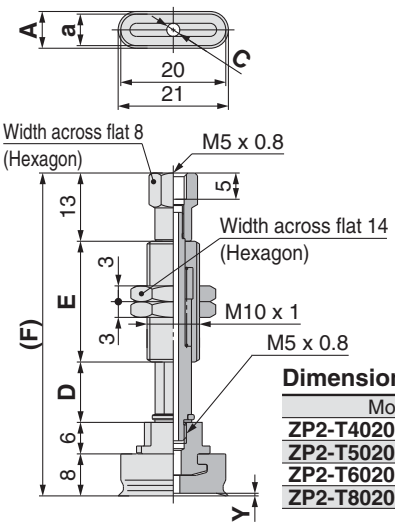

Dimensions

Model	a	A	C	Y
ZP2-T4020W□K★-B5	4	5	2 x 1.8	
ZP2-T5020W□K★-B5	5	6	2 x 2	0.5
ZP2-T6020W□K★-B5	6	7	2.5	
ZP2-T8020W□K★-B5	8	9	3	0.8

ZP2-T□30W□K★-B5

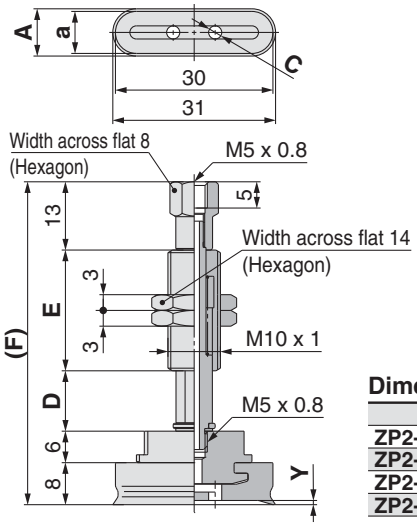

Dimensions

Model	a	A	C	Y
ZP2-T4030W□K★-B5	4	5	2 x 1.8	
ZP2-T5030W□K★-B5	5	6		0.5
ZP2-T6030W□K★-B5	6	7	2 x 2.5	
ZP2-T8030W□K★-B5	8	9		0.8

Dimensions common for all three drawings
Dimensions (per buffer stroke)

Stroke (★)	D	E	F
10	11.5	23	61.5
20	21.5	51	99.5
30	31.5		109.5
40	41.5	77	145.5
50	51.5		155.5

Dimensions: With Buffer

ZP2-T□□W□K★-$^{04}_{06}$

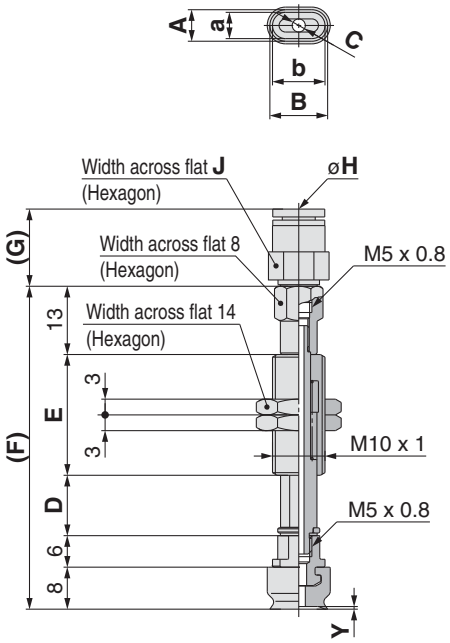

Dimensions

Model	a	A	b	B	C	Y
ZP2-T3507W□K★-$^{04}_{06}$	3.5	4.5	7	8	2 x 1.5	0.5
ZP2-T4010W□K★-$^{04}_{06}$	4	5	10	11	2.5	
ZP2-T5010W□K★-$^{04}_{06}$	5	6				
ZP2-T6010W□K★-$^{04}_{06}$	6	7				

ZP2-T□20W□K★-$^{04}_{06}$

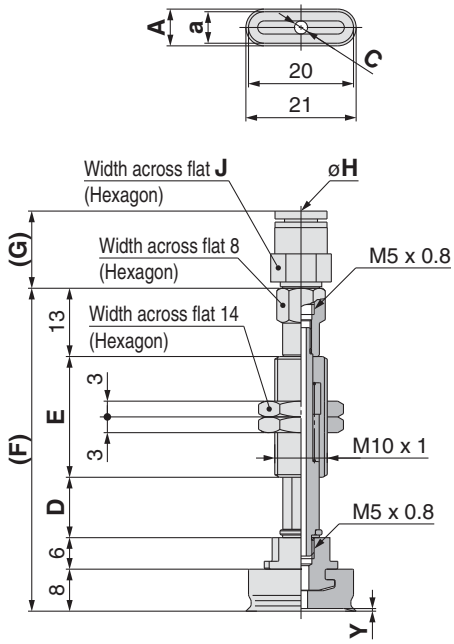

Dimensions

Model	a	A	C	Y
ZP2-T4020W□K★-$^{04}_{06}$	4	5	2 x 1.8	0.5
ZP2-T5020W□K★-$^{04}_{06}$	5	6	2 x 2	
ZP2-T6020W□K★-$^{04}_{06}$	6	7	2.5	
ZP2-T8020W□K★-$^{04}_{06}$	8	9	3	0.8

ZP2-T□30W□K★-$^{04}_{06}$

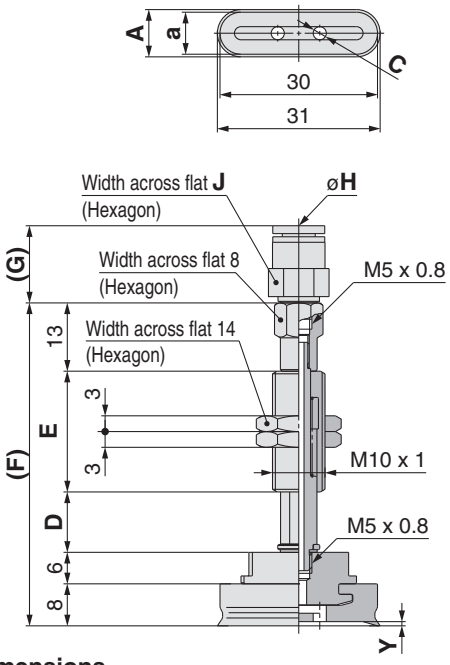

Dimensions

Model	a	A	C	Y
ZP2-T4030W□K★-$^{04}_{06}$	4	5	2 x 1.8	0.5
ZP2-T5030W□K★-$^{04}_{06}$	5	6	2 x 2.5	
ZP2-T6030W□K★-$^{04}_{06}$	6	7		
ZP2-T8030W□K★-$^{04}_{06}$	8	9		0.8

Dimensions common for all three drawings
Dimensions (per buffer stroke)

Stroke (★)	D	E	F	H: ø4		H: ø6	
				G	J	G	J
10	11.5	23	61.5	13.9	8	14.7	10
20	21.5	51	99.5				
30	31.5		109.5				
40	41.5	77	145.5				
50	51.5		155.5				

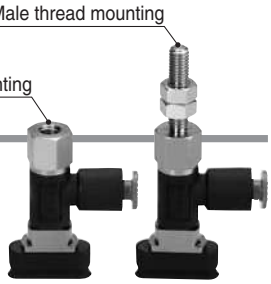

How to Order

Without buffer **ZP2 – R 3507 W N – 04 – A5**

Vacuum inlet direction

Symbol	Direction
R	Lateral

Pad size

Symbol	Size
3507	3.5 x 7
4010	4 x 10
5010	5 x 10
6010	6 x 10
4020	4 x 20
5020	5 x 20
6020	6 x 20
8020	8 x 20
4030	4 x 30
5030	5 x 30
6030	6 x 30
8030	8 x 30

Pad type

Symbol	Type
W	Oval

Pad material (□)

Symbol	Material
N	NBR
S	Silicone rubber
U	Urethane rubber
F	FKM
GN	Conductive NBR
GS	Conductive silicone rubber

Mounting

Symbol	Thread size
A5	M5 x 0.8 (Male thread)
B5	M5 x 0.8 (Female thread)

Vacuum inlet (■)

Symbol	Applicable tube O.D.
04	ø4
06	ø6

Replacement Part No.

Model		Pad unit part no.	Adapter part no.	Type R adapter part no.
ZP2-R3507W□-■-A5	ZP2-R3507W□-■-B5	ZP2-3507W□	ZP2A-001	ZPRS-■-A5
ZP2-R4010W□-■-A5	ZP2-R4010W□-■-B5	ZP2-4010W□		
ZP2-R5010W□-■-A5	ZP2-R5010W□-■-B5	ZP2-5010W□		
ZP2-R6010W□-■-A5	ZP2-R6010W□-■-B5	ZP2-6010W□		
ZP2-R4020W□-■-A5	ZP2-R4020W□-■-B5	ZP2-4020W□	ZP2A-002	ZPRS-■-B5
ZP2-R5020W□-■-A5	ZP2-R5020W□-■-B5	ZP2-5020W□		
ZP2-R6020W□-■-A5	ZP2-R6020W□-■-B5	ZP2-6020W□		
ZP2-R8020W□-■-A5	ZP2-R8020W□-■-B5	ZP2-8020W□		
ZP2-R4030W□-■-A5	ZP2-R4030W□-■-B5	ZP2-4030W□	ZP2A-003	
ZP2-R5030W□-■-A5	ZP2-R5030W□-■-B5	ZP2-5030W□		
ZP2-R6030W□-■-A5	ZP2-R6030W□-■-B5	ZP2-6030W□		
ZP2-R8030W□-■-A5	ZP2-R8030W□-■-B5	ZP2-8030W□		

Vacuum inlet

Symbol	Applicable tube O.D.
04	ø4
06	ø6

Note 1) □ Indicates the pad material.
Note 2) ■ Indicates the vacuum inlet.

Dimensions: Without Buffer

ZP2-R□W□-$^{04}_{06}$-A5

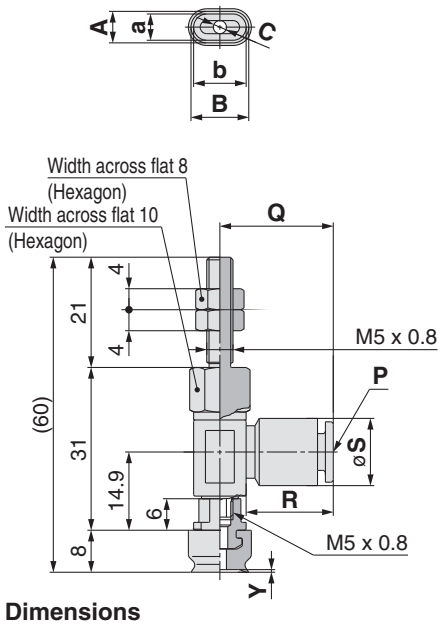

Dimensions

Model	a	A	b	B	C	Y
ZP2-R3507W□-■-A5	3.5	4.5	7	8	2 x 1.5	0.5
ZP2-R4010W□-■-A5	4	5	10	11		
ZP2-R5010W□-■-A5	5	6			2.5	
ZP2-R6010W□-■-A5	6	7				

ZP2-R□20W□-$^{04}_{06}$-A5

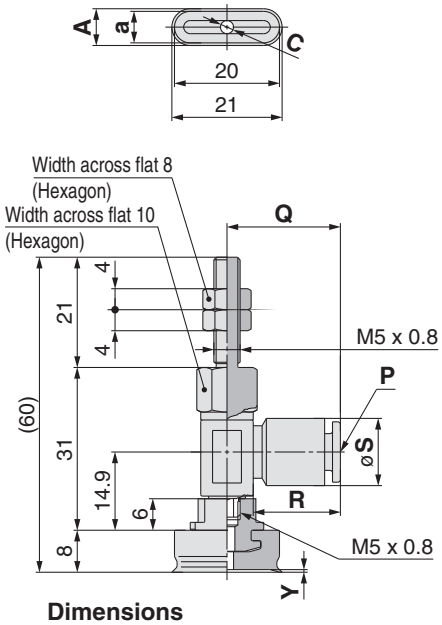

Dimensions

Model	a	A	C	Y
ZP2-R4020W□-■-A5	4	5	2 x 1.8	0.5
ZP2-R5020W□-■-A5	5	6	2 x 2	
ZP2-R6020W□-■-A5	6	7	2.5	
ZP2-R8020W□-■-A5	8	9	3	0.8

ZP2-R□30W□-$^{04}_{06}$-A5

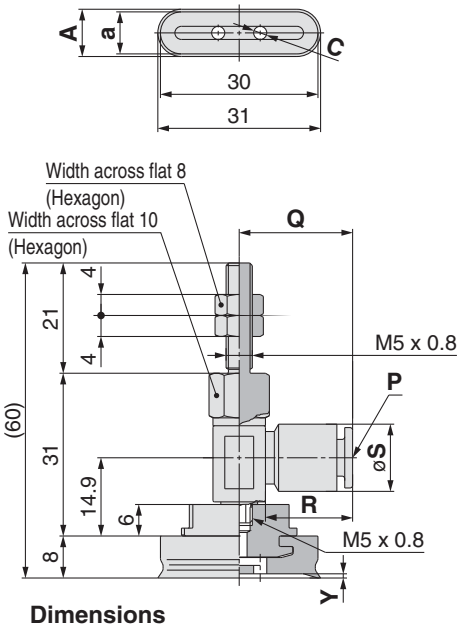

Dimensions

Model	a	A	C	Y
ZP2-R4030W□-■-A5	4	4.8	2 x 1.8	0.5
ZP2-R5030W□-■-A5	5	6	2 x 2.5	
ZP2-R6030W□-■-A5	6	7		
ZP2-R8030W□-■-A5	8	9		0.8

Dimensions common for all three drawings

Dimensions (per applicable tube)

Applicable tube O.D. (■)	P	Q	R	S
ø4	4	20.6	15.6	10.4
ø6	6	21.6	16.6	12.8

Dimensions: Without Buffer

ZP2-R□□□W□-$^{04}_{06}$-B5

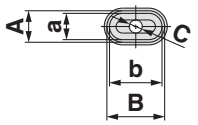

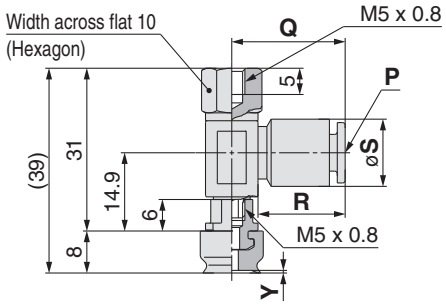

Dimensions

Model	a	A	b	B	C	Y
ZP2-R3507W□-■-B5	3.5	4.5	7	8	2 x 1.5	0.5
ZP2-R4010W□-■-B5	4	5	10	11		
ZP2-R5010W□-■-B5	5	6			2.5	
ZP2-R6010W□-■-B5	6	7				

ZP2-R□20W□-$^{04}_{06}$-B5

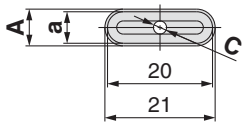

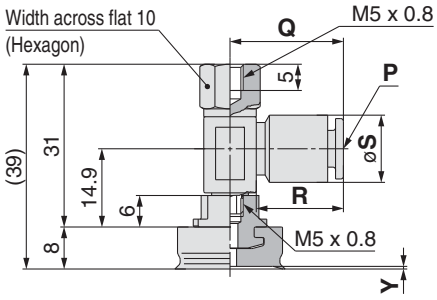

Dimensions

Model	a	A	C	Y
ZP2-R4020W□-■-B5	4	5	2 x 1.8	
ZP2-R5020W□-■-B5	5	6	2 x 2	0.5
ZP2-R6020W□-■-B5	6	7	2.5	
ZP2-R8020W□-■-B5	8	9	3	0.8

ZP2-R□30W□-$^{04}_{06}$-B5

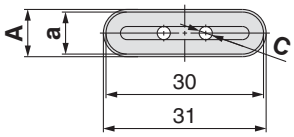

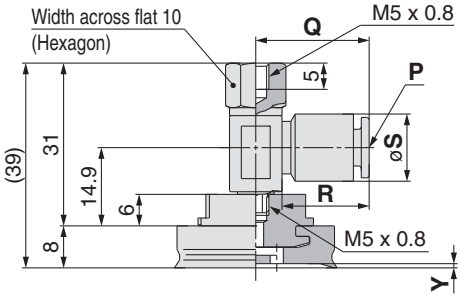

Dimensions

Model	a	A	C	Y
ZP2-R4030W□-■-B5	4	5	2 x 1.8	
ZP2-R5030W□-■-B5	5	6	2 x 2.5	0.5
ZP2-R6030W□-■-B5	6	7		
ZP2-R8030W□-■-B5	8	9		0.8

Dimensions common for all three drawings
Dimensions (per applicable tube)

Applicable tube O.D. (■)	P	Q	R	S
ø4	4	20.6	15.6	10.4
ø6	6	21.6	16.6	12.8

How to Order

With buffer ZP2 – R 3507 W N K 10 – 04

Vacuum inlet direction

Symbol	Direction
R	Lateral

Pad size

Symbol	Size	Symbol	Size
3507	3.5 x 7	6020	6 x 20
4010	4 x 10	8020	8 x 20
5010	5 x 10	4030	4 x 30
6010	6 x 10	5030	5 x 30
4020	4 x 20	6030	6 x 30
5020	5 x 20	8030	8 x 30

Pad type

Symbol	Type
W	Oval

Pad material (□)

Symbol	Material
N	NBR
S	Silicone rubber
U	Urethane rubber
F	FKM
GN	Conductive NBR
GS	Conductive silicone rubber

Buffer specification

Symbol	Specification
K	Non-rotating

Buffer stroke (★)

Symbol	Stroke
10	10 mm
20	20 mm
30	30 mm
40	40 mm
50	50 mm

Vacuum inlet (■)

Symbol	Applicable tube O.D.
04	ø4
06	ø6

Replacement Part No.

Model	Pad unit part no.	Adapter part no.	Type R adapter part no.	Buffer assembly part no.
ZP2-R3507W□K★-■	ZP2-3507W□	ZP2A-001	ZPRS-■-B5	ZPB2K★
ZP2-R4010W□K★-■	ZP2-4010W□			
ZP2-R5010W□K★-■	ZP2-5010W□			
ZP2-R6010W□K★-■	ZP2-6010W□			
ZP2-R4020W□K★-■	ZP2-4020W□	ZP2A-002		
ZP2-R5020W□K★-■	ZP2-5020W□			
ZP2-R6020W□K★-■	ZP2-6020W□			
ZP2-R8020W□K★-■	ZP2-8020W□			
ZP2-R4030W□K★-■	ZP2-4030W□	ZP2A-003		
ZP2-R5030W□K★-■	ZP2-5030W□			
ZP2-R6030W□K★-■	ZP2-6030W□			
ZP2-R8030W□K★-■	ZP2-8030W□			

Vacuum inlet

Symbol	Applicable tube O.D.
04	ø4
06	ø6

Buffer stroke

Symbol	Stroke
10	10 mm
20	20 mm
30	30 mm
40	40 mm
50	50 mm

Note 1) □ Indicates the pad material.
Note 2) ★ Indicates the buffer stroke.
Note 3) ■ Indicates the vacuum inlet.

Buffer Specifications (Non-rotating)

Stroke (mm)		10, 20, 30, 40, 50
Spring reactive force	**At 0 stroke (N)**	1.0
	At buffer stroke (N)	3.0
Tightening torque		3.0 N·m 5%

Dimensions: With Buffer

ZP2-R□W□K★-04/06

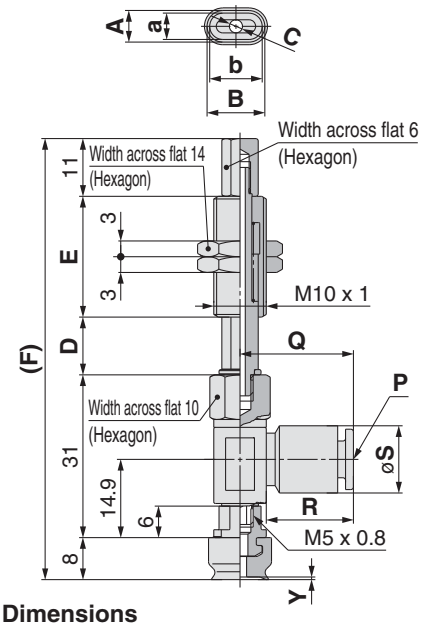

Dimensions

Model	a	A	b	B	C	Y
ZP2-R3507W□K★-■	3.5	4.5	7	8	2 x 1.5	0.5
ZP2-R4010W□K★-■	4	5	10	11		
ZP2-R5010W□K★-■	5	6			2.5	
ZP2-R6010W□K★-■	6	7				

ZP2-R□20W□K★-04/06

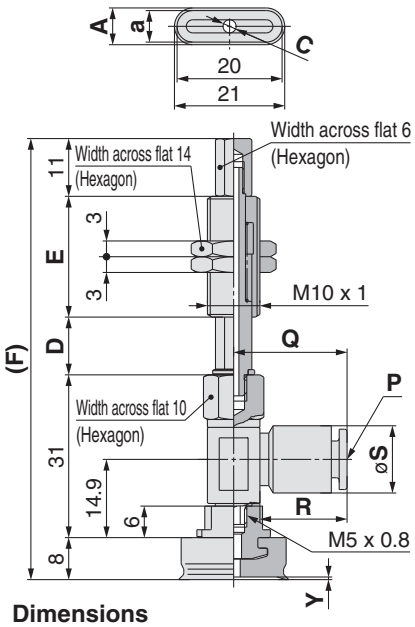

Dimensions

Model	a	A	C	Y
ZP2-R4020W□K★-■	4	5	2 x 1.8	0.5
ZP2-R5020W□K★-■	5	6	2 x 2	
ZP2-R6020W□K★-■	6	7	2.5	
ZP2-R8020W□K★-■	8	9	3	0.8

ZP2-R□30W□K★-04/06

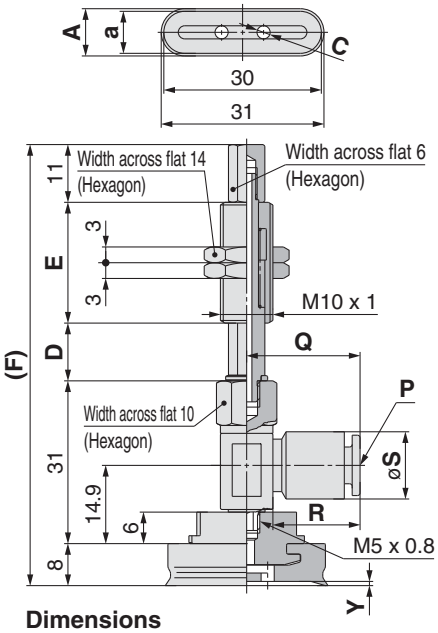

Dimensions

Model	a	A	C	Y
ZP2-R4030W□K★-■	4	5	2 x 1.8	0.5
ZP2-R5030W□K★-■	5	6		
ZP2-R6030W□K★-■	6	7	2 x 2.5	
ZP2-R8030W□K★-■	8	9		0.8

Dimensions common for all three drawings

Dimensions (per stroke)

Stroke (★)	D	E	F
10	11	23	84
20	21	51	122
30	31	51	132
40	41	77	168
50	51		178

Dimensions (per applicable tube)

Applicable tube O.D. (■)	P	Q	R	S
ø4	4	20.6	15.6	10.4
ø6	6	21.6	16.6	12.8

Pad with Ball Spline Buffer

Pad diameter ø2, ø4, ø6, ø8

Symbol/Type
U: Flat

■**Ball spline guide is used to the buffer.**

How to Order

ZP2 – T 02 U N S 6

Vacuum inlet direction

Symbol	Direction
T	Vertical

Pad diameter

Symbol	Pad diameter
02	ø2
04	ø4
06	ø6
08	ø8

Pad type

Symbol	Type
U	Flat

Pad material

Symbol	Material
N	NBR
S	Silicone rubber
U	Urethane rubber
F	FKM
GN	Conductive NBR
GS	Conductive silicone rubber

Buffer specification

Symbol	Specification
S	Ball spline

Buffer stroke

Symbol	Stroke
6	6 mm

Buffer Specifications

Specifications		Ball spline
Stroke (mm)		6
Spring reactive force	**At 0 stroke (N)**	0.8
	At buffer stroke (N)	1.1

Replacement Part No.

Model	Pad unit part no.	Adapter part no.	Buffer assembly part no.
ZP2-T02U□S6	ZP02U□	ZPT1-B5	ZP2B-T3S6
ZP2-T04U□S6	ZP04U□		
ZP2-T06U□S6	ZP06U□		
ZP2-T08U□S6	ZP08U□		

Note) □ Indicates the pad material.

Dimensions

ZP2-T02U□S6

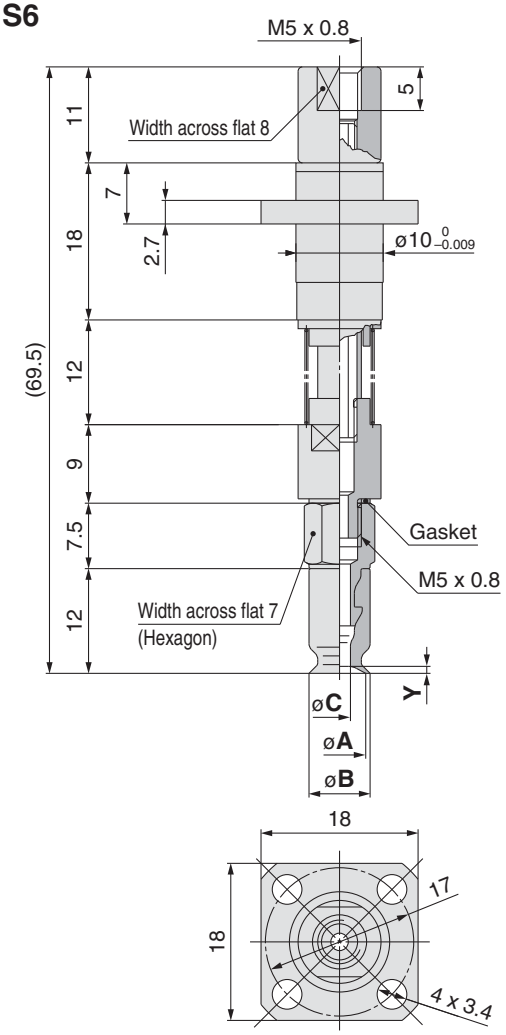

Dimensions

Model	A	B	C	Y
ZP2-T02U□S6	2	2.6	1.2	0.5
ZP2-T04U□S6	4	4.8	1.6	0.8
ZP2-T06U□S6	6	7	2.5	
ZP2-T08U□S6	8	9		1

Mark-free Pad Series

Minimises the transfer of rubber constituents to the workpiece.

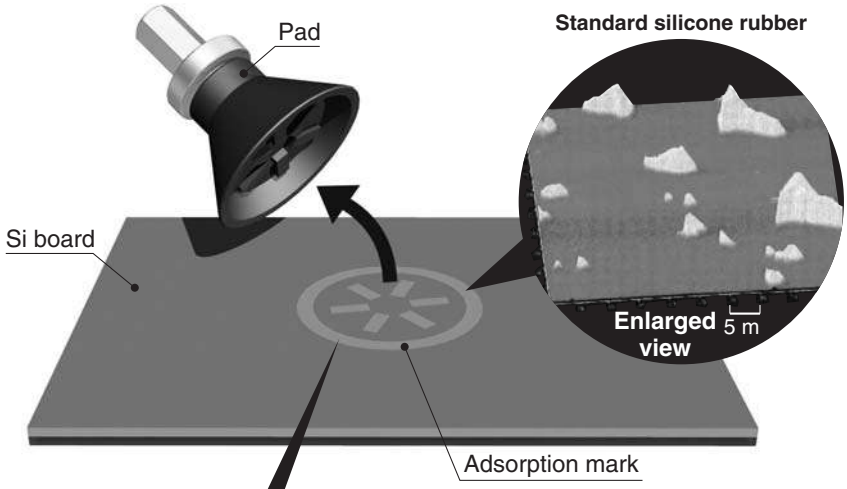

Analysis equipment:
Scanning probe microscope

Measurement conditions:
Measurement mode
Atomic force microscope DFM mode

Sample conditions:
Press the vacuum pad to the Si board for 1 hour.

Monitoring location:
Monitored at a randomly selected location where adsorption marks were likely due to contact between the vacuum pad and Si board.

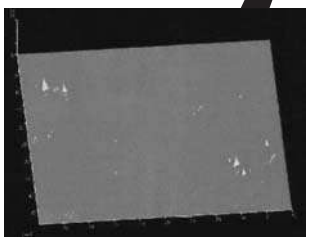

5 μm

1 Mark-free NBR Pad

Minimises the transfer of rubber constituents which is supposed to be the cause of adsorption.

Pad diameter: ø4 to ø125

Heavy-duty type

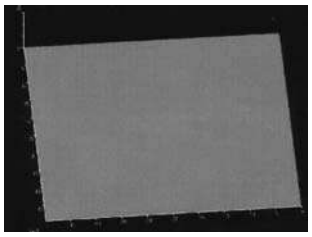

5 μm

2 Stuck Fluororesin Pad

Fluororesin sheet is baked into the pad adsorption surface. Prevents the transfer of rubber constituents.

Pad diameter: ø40 to ø125

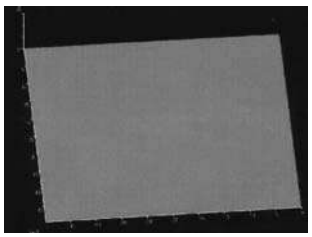

5 μm

3 Resin Attachment

PEEK material is used for the pad adsorption surface. Prevents the transfer of rubber constituents.

Pad diameter: ø6 to ø32

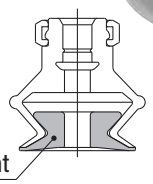

Attachment

Related Pad

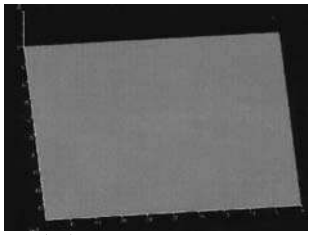

5 μm

4 Cyclone Pad

Made to Order

No adsorption mark is left because the vacuum pad does not come into

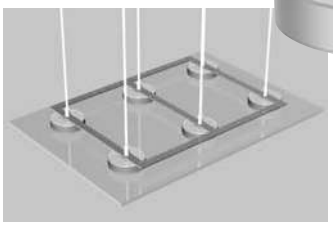

The above adsorption marks show sample data. Actual results will depend on the conditions.

	Pad type	Material of the adsorption part (Part in contact with the workpiece)	Adsorption mark *1			Static friction ratio *5
			Condition *2 (Initial value)		Operating temperature range (C)	
			Visual checking	Vapour method *3		
Mark-free Pad Series	1 Mark-free NBR pad	Mark-free NBR (Specially treated *4)	●	●	5 to 40	0.6
	2 Stuck fluororesin pad	NBR + Stuck fluororesin	●	●	5 to 60	0.2
		Fluororubber + Stuck fluororesin	●	●	5 to 100	
	3 Resin attachment	PEEK	●	●	5 to 40	0.2
		Conductive PEEK (Volume resistivity: 1 x 10^6 cm)	●	●		
	4 Cyclone pad *Made to Order*	—	●	●	Standard: –5 to 60 (No freezing)	–
Standard	Series ZP (Standard material)	NBR Fluororubber Conductive NBR/Silicone rubber	×	×	–	–
		Silicone rubber Urethane rubber	○	×		

Adsorption mark characteristics [●: Little or no influence ○: Can be used depending on the conditions. ×: Not suitable]

∗ The above table is for reference when selecting the pad.
Values and evaluation are reference data only. Preparatory testing under actual operating conditions is recommended.

∗1 **Adsorption mark** — Indicates the transfer of rubber constituents from the pad.
∗2 **Condition** — Visual evaluation of the adsorption mark
∗3 **Vapour method** — Method of applying vapour to the workpiece to visually check for adsorption marks
∗4 **Specially treated** — NBR is specially treated to modify and reduce the transfer of rubber constituents.
∗5 **Static friction ratio** — Static friction ratio when the workpiece (glass) is adsorbed by the pad. (NBR = 1 as a benchmark)
When the cyclone pad is used, the pad does not come into contact with the workpiece (glass).
The customer needs to install a guide for holding.

Cleaning method [Mark-free NBR pad/Stuck fluororesin pad/Resin attachment]

• Always clean the product before operation and when carrying out regular maintenance.

1) Hold the part other than the adsorption surface.
   ∗ Non particle-generating vinyl gloves are recommended.
2) Soak a non particle-generating cloth in 2-propanol (isopropyl alcohol) (purity > 99.5%).
   ∗ This solution is a recommendation. If not available, use **a solution with high purity which does not affect the material properties**.
3) Wipe the adsorption surface (pad/resin attachment) and the part that comes into contact with the workpiece.
4) Dry them with clean air blow. (Or, wipe again with a dry non particle-generating cloth.)

Mark-free Pad

Pad diameter ø4, ø6, ø8, ø10, ø16, ø25, ø32, ø40, ø50

Symbol/Type

U: Flat

- **Pad which reduces the adsorption marks left on the workpiece by rubber.**
- **The pad is made from mark-free NBR, and the NBR is then specially treated to minimise the transfer of rubber constituents to the workpiece.**
- **Applicable for the ZP series adapter**

How to Order

Pad unit ZP2 – 04 U CL – X19

Pad diameter

Symbol	Pad diameter
04	ø4
06	ø6
08	ø8
10	ø10
16	ø16
25	ø25
32	ø32
40	ø40
50	ø50

Pad type

Symbol	Type
U	Flat

Pad material

Symbol	Material
CL	Mark-free NBR

With/Without lock ring

—	With lock ring
X19	Without lock ring Note)

Note) ø10 or larger

Dimensions: Pad Unit

ZP2-04 to 08UCL

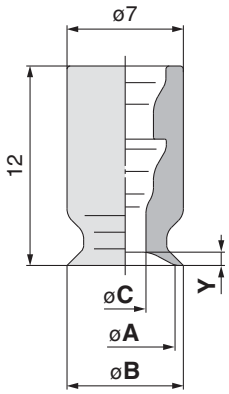

Dimensions

Model	A	B	C	Y
ZP2-04UCL	4	4.8	1.6	0.8
ZP2-06UCL	6	7	2.5	
ZP2-08UCL	8	9		1

ZP2-10 to 50UCL

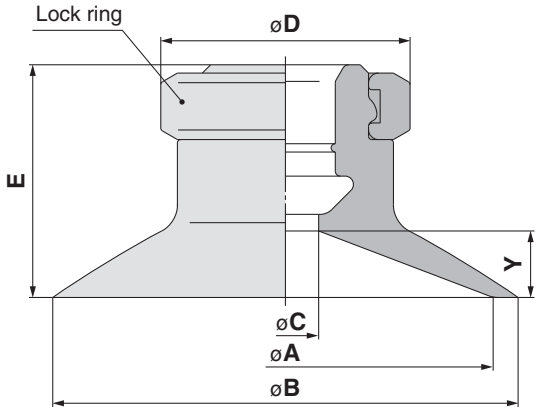

Dimensions

Model	A	B	C	D	E	Y
ZP2-10UCL	10	12	4	13	12	3
ZP2-16UCL	16	18			12.5	3.5
ZP2-25UCL	25	28		15	14	4
ZP2-32UCL	32	35			14.5	4.5
ZP2-40UCL	40	43	7	18	18.5	6.5
ZP2-50UCL	50	53			19.5	7.5

Adapter Mounting Dimensions

If an adapter is made by the customer, design the adapter with the dimensions shown below.

Applicable pad 04U/06U/08U

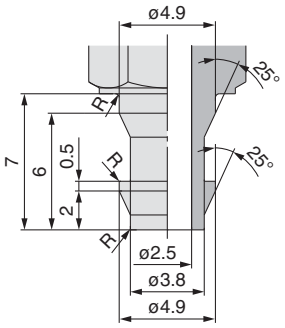

Applicable pad 10U/16U

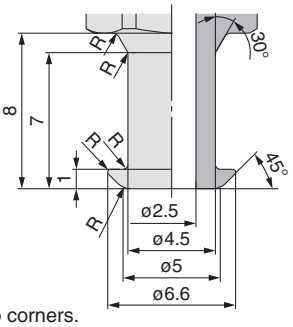

Applicable pad 25U/32U

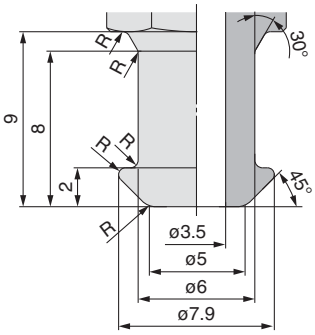

Applicable pad 40U/50U

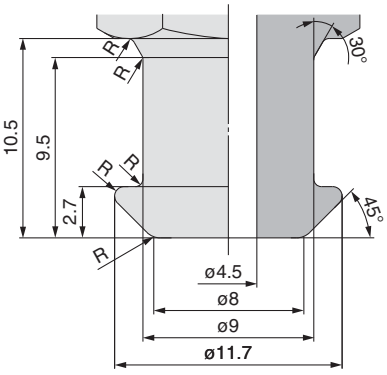

Note) R part has to be smooth with no corners.

∗ Refer to page 66 for adapter applicable to the ZP2 series.

Mark-free Pad

Pad diameter ø40, ø50, ø63, ø80, ø100, ø125

Symbol/Type

H: Heavy-duty (Flat with rib)

- **Pad which reduces the adsorption marks left on the workpiece by rubber.**
- **The pad is made from mark-free NBR, and the NBR is then specially treated to minimise the transfer of rubber constituents to the workpiece.**
- **Prevents rubber constituents of the pad from transferring by baking the fluororesin sheet to the adsorption surface.**

How to Order

Pad unit **ZP2 − 40 H CL**

Stuck fluororesin

Pad diameter

Symbol	Pad diameter
40	ø40
50	ø50
63	ø63
80	ø80
100	ø100
125	ø125

Pad type

Symbol	Type
H	Heavy-duty (Flat with rib)

Pad material

Symbol	Material
CL	Mark-free NBR
NT	NBR + Stuck fluororesin
FT	Fluororubber + Stuck fluororesin

Dimensions: Pad Unit

ZP2-$^{40}_{50}$H□

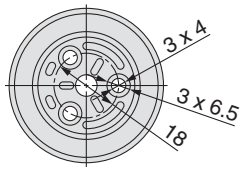

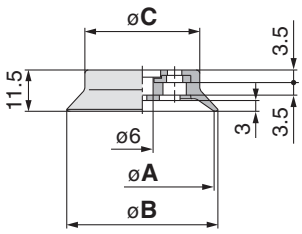

Dimensions

Model	A	B	C
ZP2-40H□	40	43	32
ZP2-50H□	50	53	42

ZP2-$^{63}_{80}$H□

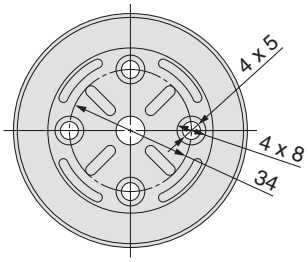

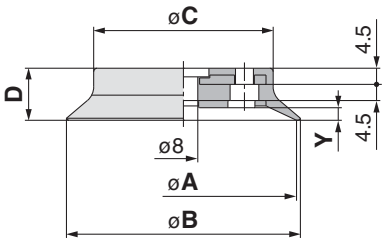

Dimensions

Model	A	B	C	D	Y
ZP2-63H□	63	65	50	14.5	3.5
ZP2-80H□	80	82	61	16.5	4.5

ZP2-$^{100}_{125}$H□

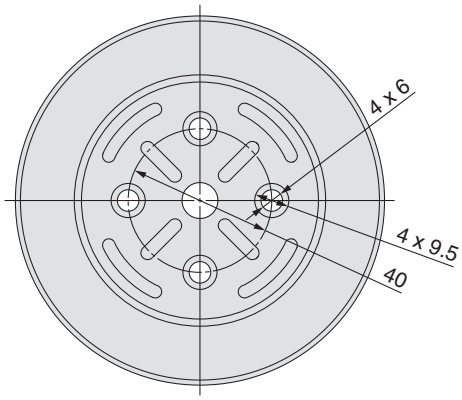

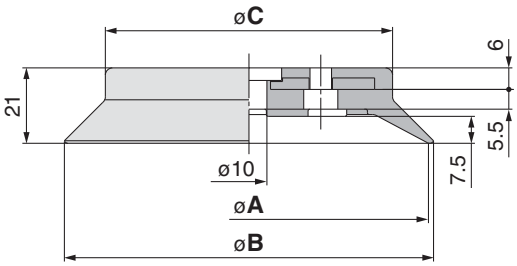

Dimensions

Model	A	B	C
ZP2-100H□	100	103	80
ZP2-125H□	125	128	104

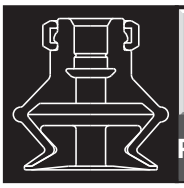

Resin Attachment

Pad diameter ø6, ø8, ø10, ø13, ø16, ø20, ø25, ø32

- **No adsorption marks (rubber constituents) are left on the workpiece.**
  Avoids direct contact between the workpiece and the rubber by installing a PEEK attachment to the bellows pad to prevent the transfer of rubber constituents.
- **Prevents sticking of the pad (rubber) and the workpiece.**
- **Ideal for the ZP series bellows pad (ø6 to ø32)**

How to Order

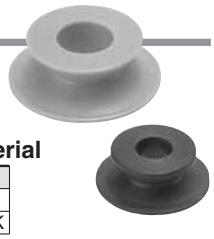

ZP2 – 06 K P

Pad diameter

Symbol	Pad diameter
06	ZP06B□
08	ZP08B□
10	ZP10B□
13	ZP13B□
16	ZP16B□
20	ZP20B□
25	ZP25B□
32	ZP32B□

Attachment material

Symbol	Material
P	PEEK
GP	Conductive PEEK

How to Order (When ordering with a pad)

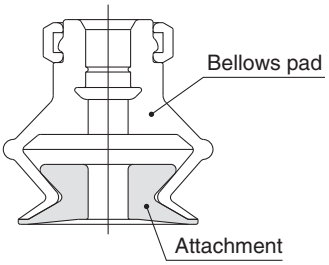

- When ordering with a pad, put "*", below the part number of the pad as shown below. Note that the pad is not delivered with the attachment assembled.
- This attachment can only be assembled onto SMC's standard bellows pad.
- When the attachment is made of conductive PEEK, use conductive material for the pad.

Ordering example
ZPT06BNJ10-B5-A8 ← **Bellows pad part no.**
*** ZP2-06KP** ← **Resin attachment part no.**

Dimensions

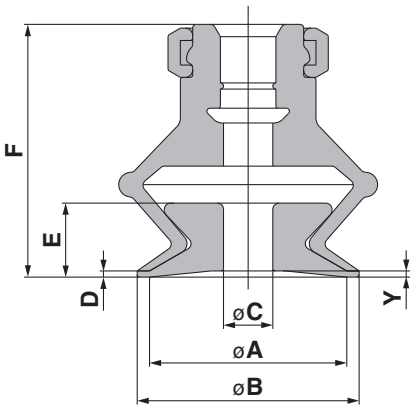

Dimensions

Model	Applicable pad	A	B	C	D	E	F	Y
ZP2-06K■	ZP06B□	6	7	1.6	0.5	3	13.5	1
ZP2-08K■	ZP08B□	8	9	3				
ZP2-10K■	ZP10B□	10	12	3.5		3.5	16.5	
ZP2-13K■	ZP13B□	13	15	4		5.5	19	
ZP2-16K■	ZP16B□	16	18			6	20.5	
ZP2-20K■	ZP20B□	20	22	8	1	8.5	24.5	
ZP2-25K■	ZP25B□	25	27	10			25	
ZP2-32K■	ZP32B□	32	34			11.5	30	

Note 1) ■ Indicates the attachment material.
Note 2) □ Indicates the pad material.

«Precautions»

Clean the product before using the attachment.
This product is not cleaned after machining. If the product is used in the condition in which it is shipped, residual material may be left on the workpieces. Clean before usage. If you have any questions, please contact SMC.

- If contact with hard material is a problem, do not use this product.
- PEEK material and cut parts fall under the security trade control.

Sponge Pad

Pad diameter ø4, ø6, ø8, ø10, ø15

Symbol/Type
S: Sponge

■ **For adsorption of workpieces with bumps**

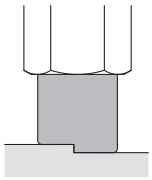

How to Order

Pad unit ZP2 − 06 S GS

Pad O.D.

Symbol	Pad diameter
04	ø4
06	ø6
08	ø8
10	ø10
15	ø15

Pad material

Symbol	Material
GS	Conductive silicone
GC	Conductive CR

Pad type

Symbol	Type
S	Sponge

Dimensions: Pad Unit

ZP2-04S□

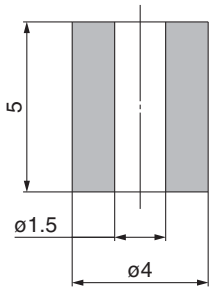

ZP2-06S□

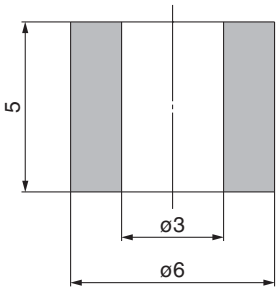

ZP2-08S□

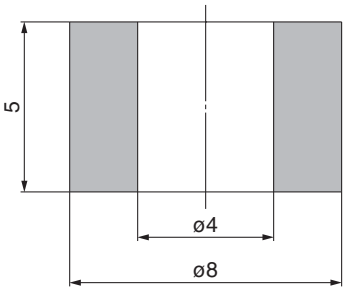

ZP2-10S□

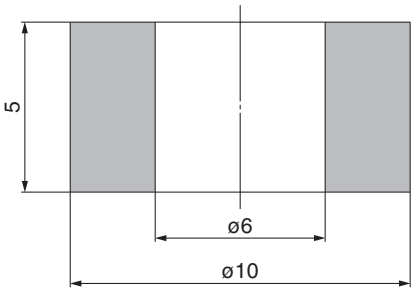

ZP2-15S□

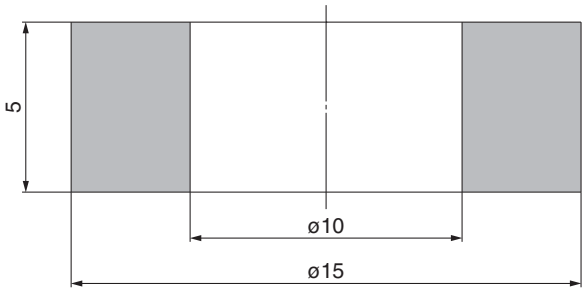

Adapter Mounting Dimensions

If an adapter is made by the customer, design the adapter with the dimensions shown below.

Applicable pad 04S

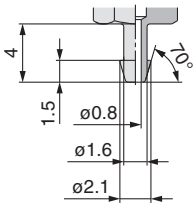

Applicable pad 06S

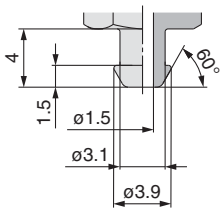

Applicable pad 08S

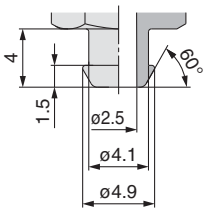

Applicable pad 10S

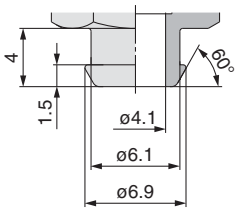

Applicable pad 15S

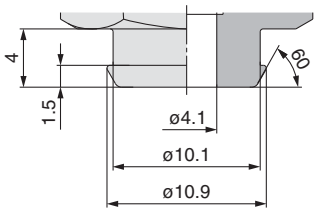

∗ Refer to pages 70 and 71 for adapter applicable to the ZP2 series.

How to Order

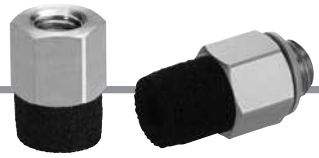

With adapter **ZP2 – T 06 S GS – A3**

Vacuum inlet direction

Symbol	Direction
T	Vertical

Pad O.D.

Symbol	Pad diameter
04	ø4
06	ø6
08	ø8
10	ø10
15	ø15

Pad type

Symbol	Type
S	Sponge

Pad material

Symbol	Material
GS	Conductive silicone
GC	Conductive CR

Mounting

Symbol	Thread size	Applicable pad O.D. symbol				
		04	06	08	10	15
A3	M3 x 0.5 (Male thread)	●	—	—	—	—
A5	M5 x 0.8 (Male thread)	—	●	●	●	●
B3	M3 x 0.5 (Female thread)	●	—	—	—	—
B5	M5 x 0.8 (Female thread)	—	●	●	●	●

Replacement Part No.

Model	Pad unit part no.	Adapter part no.
ZP2-T04S□-A3	ZP2-04S□	ZP2A-S01P
ZP2-T06S□-A5	ZP2-06S□	ZP2A-S02P
ZP2-T08S□-A5	ZP2-08S□	ZP2A-S03P
ZP2-T10S□-A5	ZP2-10S□	ZP2A-S04P
ZP2-T15S□-A5	ZP2-15S□	ZP2A-S05P
ZP2-T04S□-B3	ZP2-04S□	ZP2A-S11
ZP2-T06S□-B5	ZP2-06S□	ZP2A-S12
ZP2-T08S□-B5	ZP2-08S□	ZP2A-S13
ZP2-T10S□-B5	ZP2-10S□	ZP2A-S14
ZP2-T15S□-B5	ZP2-15S□	ZP2A-S15

Note) □ in the table indicates the pad material.

Dimensions: With Adapter

ZP2-T04S□-A3

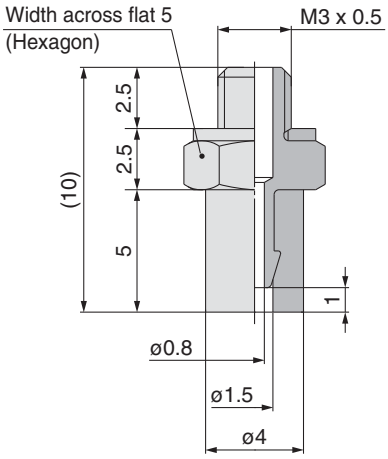

ZP2-T06S□-A5

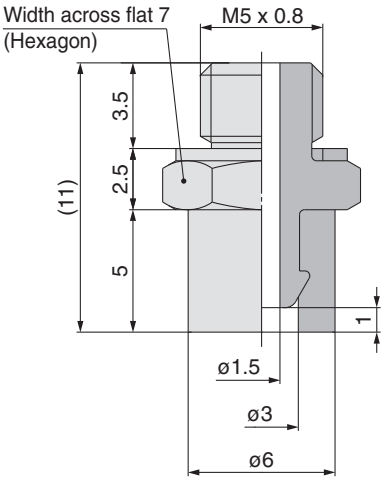

ZP2-T08S□-A5

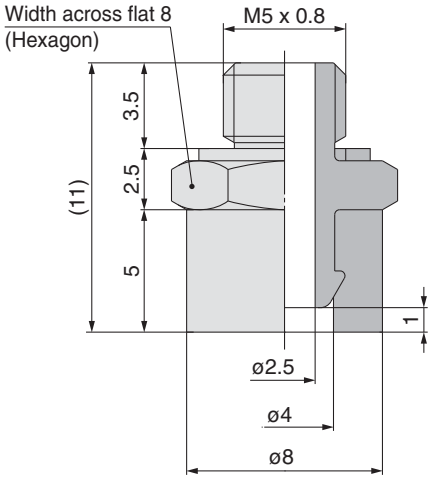

Dimensions: With Adapter

ZP2-T10S□-A5

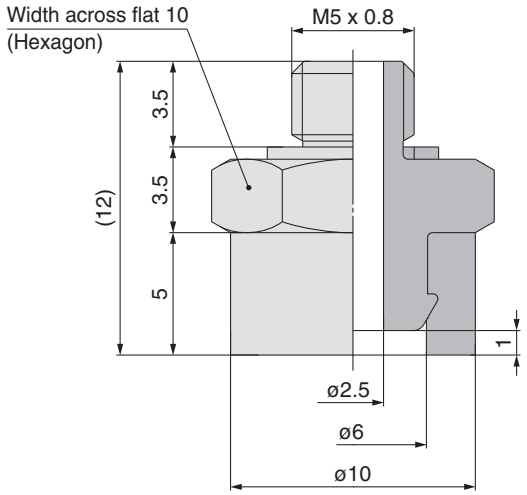

ZP2-T15S□-A5

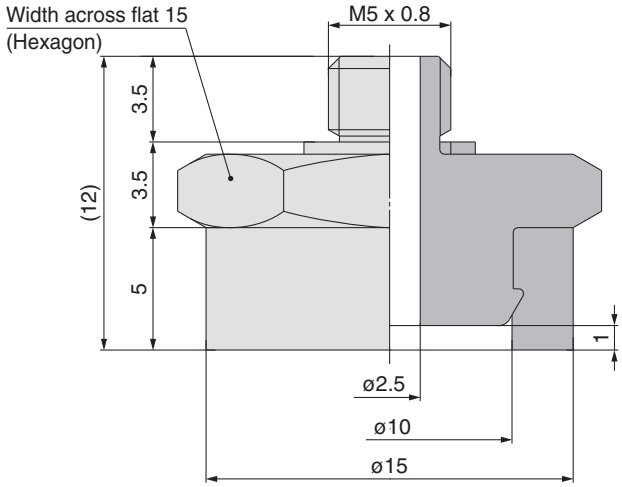

ZP2-T04S□-B3

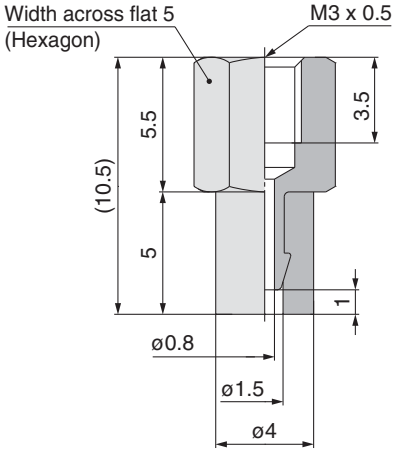

ZP2-T06S□-B5

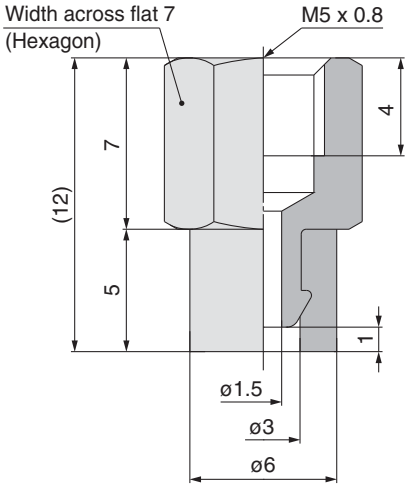

ZP2-T08S□-B5

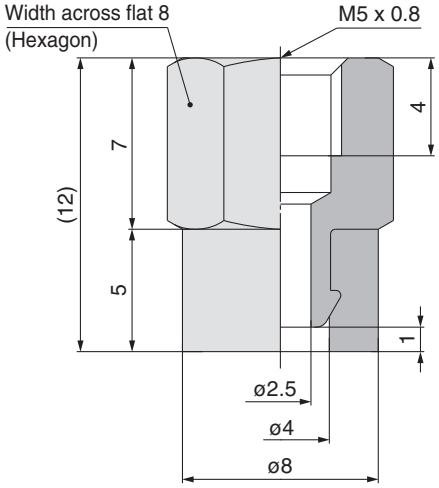

ZP2-T10S□-B5

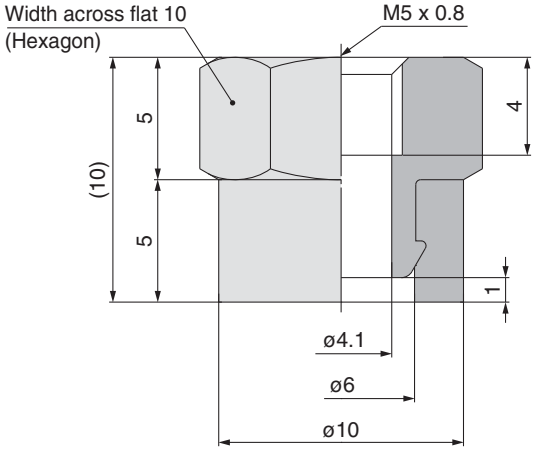

ZP2-T15S□-B5

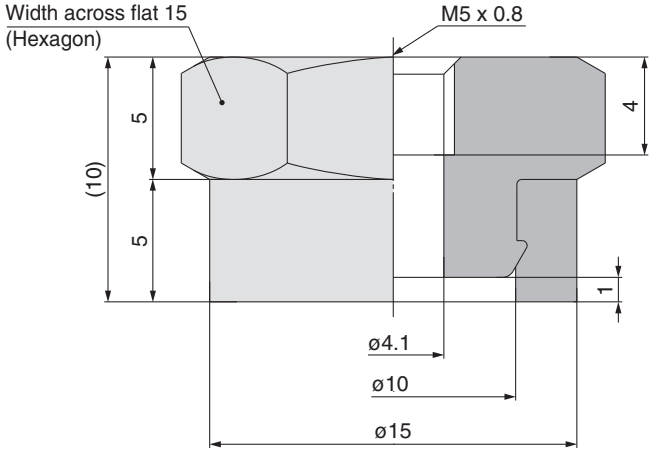

Heavy-duty Pad

Pad diameter ø32, ø150, ø250, ø300, ø340

Symbol/Type

H: Heavy-duty (Flat with rib)
HT: Heavy-duty (Thin flat with rib)

■ **Reinforced pad to prevent deformation when transferring heavy or large workpieces**

How to Order

Pad unit **ZP2 – 32 H N**

Pad diameter

Symbol	Pad diameter
32	ø32
150	ø150
250	ø250
300	ø300
340	ø340

Pad material

Symbol	Material
N	NBR
S	Silicone rubber
F	FKM
C	CR

Note) Silicone rubber is only applicable to the ø32 pad.

Pad type—Pad diameter

Pad type \ Pad diameter (Symbol)	32	150	250	300	340
H (Flat with rib)	●	—	—	●	●
HT (Thin flat with rib)	—	●	●	—	—

Dimensions: Pad Unit

ZP2-32H□

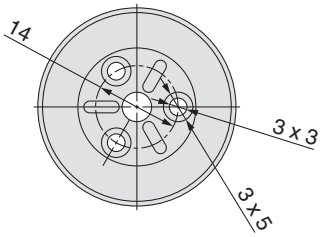

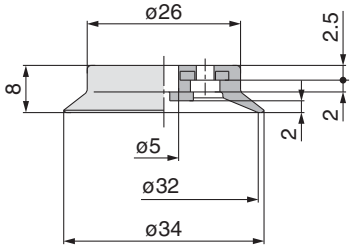

ZP2-300H□

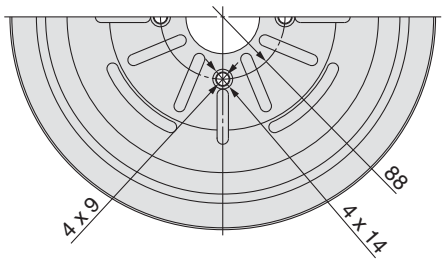

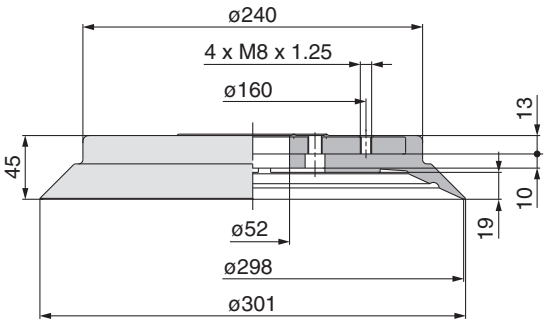

ZP2-340H□

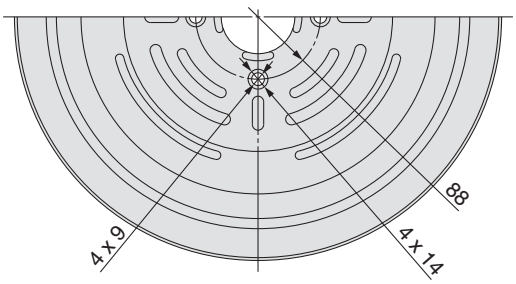

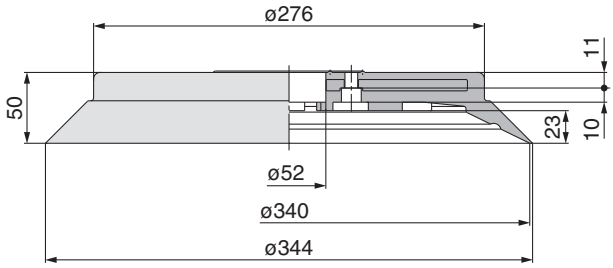

Dimensions

ZP2-150HT□

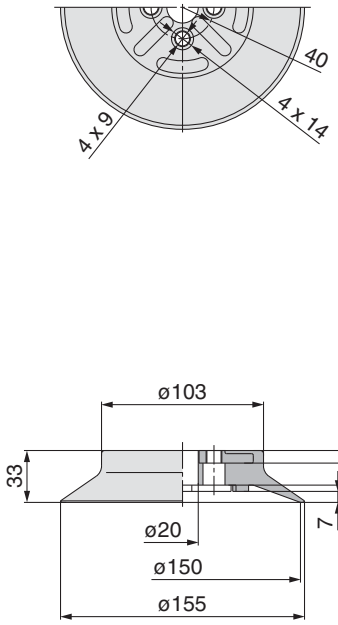

ZP2-250HT□

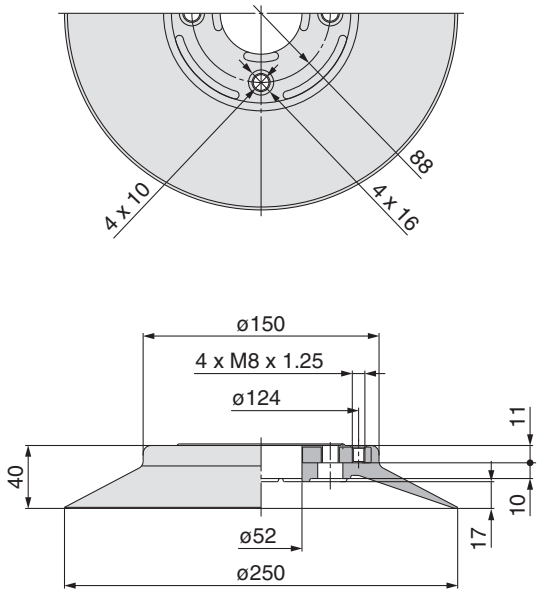

Heavy-duty Pad

Pad diameter ø32, ø150

Symbol/Type

HB: Heavy-duty (Bellows)

■For heavy or large workpieces

How to Order

Pad unit ZP2 – 32 HB N

Pad diameter

Symbol	Pad diameter
32	ø32
150	ø150

Pad material

Symbol	Material
N	NBR
S	Silicone rubber
F	FKM
C	CR

Note) Silicone rubber is only applicable to the ø32 pad.

Pad type

Symbol	Type
HB	Heavy-duty (Bellows)

Dimensions: Pad Unit

ZP2-32HB□

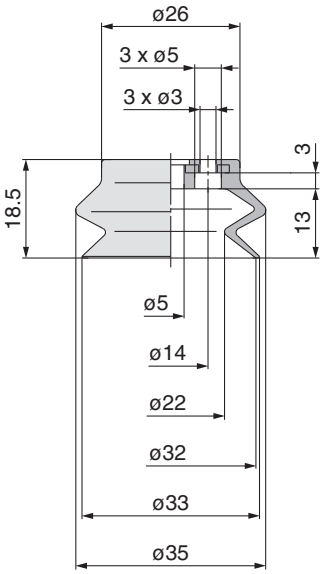

ZP2-150HB□

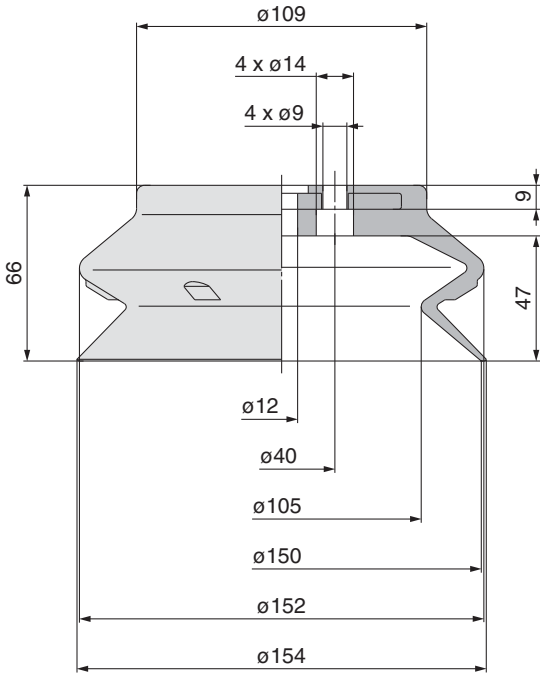

Heavy-duty Pad

Pad size 30 x 50

Symbol/Type
HW: Heavy-duty (Oval)

■**For heavy or large workpieces**

How to Order

Pad unit ZP2 – 3050 HW N

Pad size

Symbol	Pad size
3050	30 x 50

Pad material

Symbol	Material
N	NBR
S	Silicone rubber
F	FKM
C	CR

Pad type

Symbol	Type
HW	Heavy-duty (Oval)

Dimensions: Pad Unit

ZP2-3050HW□

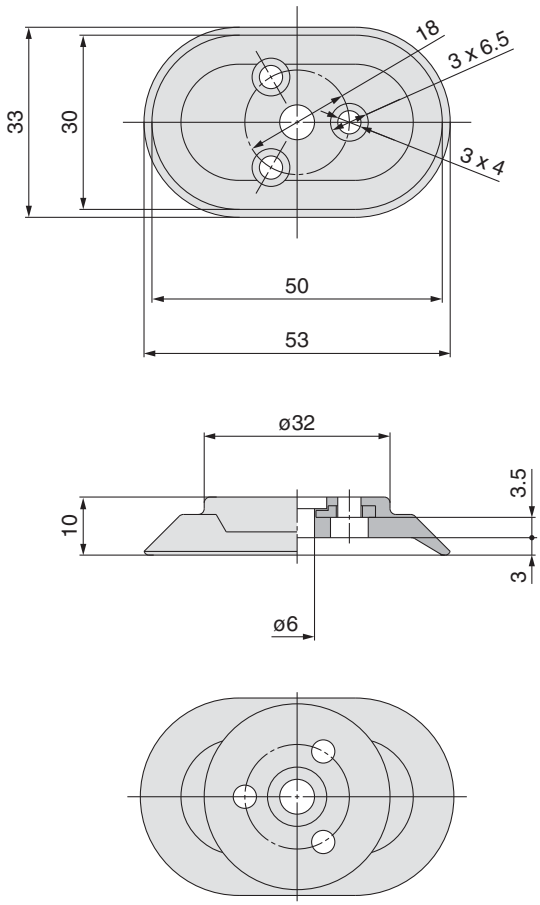

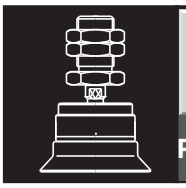

Heavy-duty Ball Joint Pad

Pad diameter ø40, ø50, ø63, ø80, ø100, ø125

Symbol/Type

H: Heavy-duty (Flat with rib)

■ For adsorption of workpieces with inclined surface

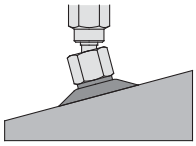

Replacement Part No.

Model	Pad unit part no.	Adapter assembly part no.	
ZP2-TF40H□	ZP40H□	ZP2A-TF1	With three M3 bolts
ZP2-TF50H□	ZP50H□		
ZP2-TF63H□	ZP63H□	ZP2A-TF2	With four M4 bolts
ZP2-TF80H□	ZP80H□		
ZP2-TF100H□	ZP100H□	ZP2A-TF3	With four M5 bolts
ZP2-TF125H□	ZP125H□		

Note) □ Indicates the pad material.

How to Order

With adapter **ZP2 − T F 40 H N**

Vacuum inlet direction **Vertical**

Vacuum inlet direction

Symbol	Direction
T	Vertical

Specification (mechanism)

Symbol	Specification
F	Ball joint

Pad diameter

Symbol	Pad diameter
40	ø40
50	ø50
63	ø63
80	ø80
100	ø100
125	ø125

Pad type

Symbol	Type
H	Heavy-duty (Flat with rib)

Pad material (□)

Symbol	Material
N	NBR
S	Silicone rubber
U	Urethane rubber
F	FKM
E	EPR

Dimensions: With Adapter

ZP2-TF$^{40}_{50}$H□

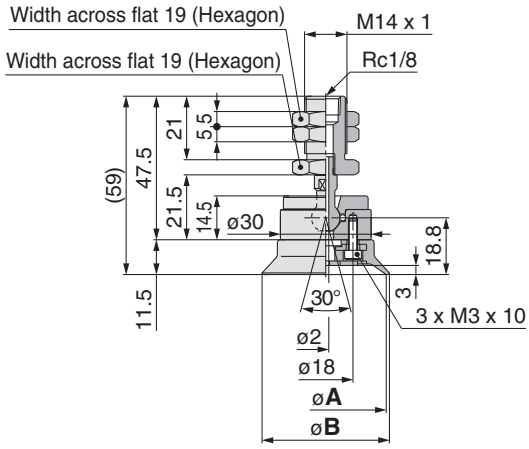

Dimensions

Model	A	B
ZP2-TF40H□	40	42
ZP2-TF50H□	50	52

ZP2-TF$^{63}_{80}$H□

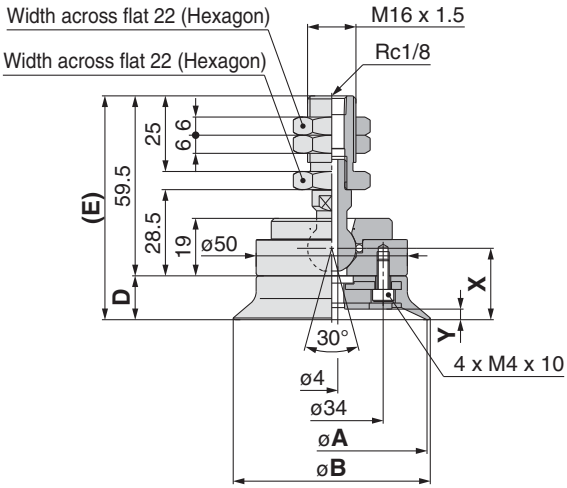

Dimensions

Model	A	B	D	E	X	Y
ZP2-TF63H□	63	65	14.5	74	23.6	3.5
ZP2-TF80H□	80	82	16.5	76	25.6	4.5

ZP2-TF$^{100}_{125}$H□

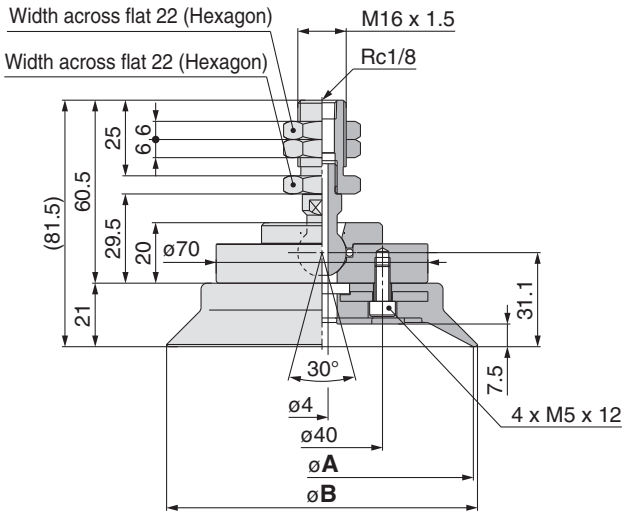

Dimensions

Model	A	B
ZP2-TF100H□	100	103
ZP2-TF125H□	125	128

How to Order

Vacuum inlet direction **Lateral**

With adapter **ZP2 − X F 40 H N**

Vacuum inlet direction

Symbol	Direction
X	Lateral

Specification (mechanism)

Symbol	Specification
F	Ball joint

Pad diameter

Symbol	Pad diameter
40	ø40
50	ø50
63	ø63
80	ø80
100	ø100
125	ø125

Pad type

Symbol	Type
H	Heavy-duty (Flat with rib)

Pad material (□)

Symbol	Material
N	NBR
S	Silicone rubber
U	Urethane rubber
F	FKM
E	EPR

Replacement Part No.

Model	Pad unit part no.	Adapter assembly part no.	
ZP2-XF40H□	ZP40H□	ZP2A-XF1	With three M3 bolts
ZP2-XF50H□	ZP50H□		
ZP2-XF63H□	ZP63H□	ZP2A-XF2	With four M4 bolts
ZP2-XF80H□	ZP80H□		
ZP2-XF100H□	ZP100H□	ZP2A-XF3	With four M5 bolts
ZP2-XF125H□	ZP125H□		

Note) □ Indicates the pad material.

Dimensions: With Adapter

ZP2-XF$^{40}_{50}$H□

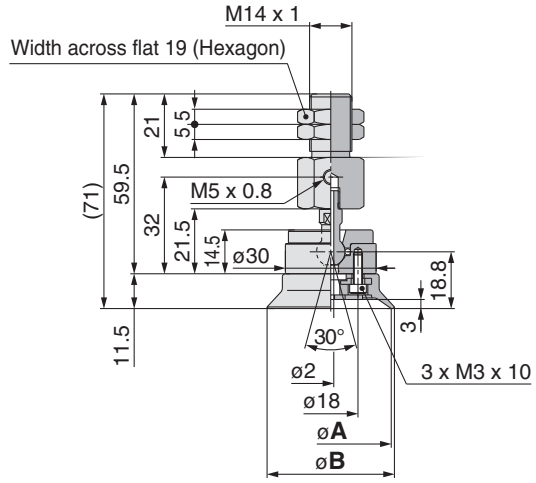

Dimensions

Model	A	B
ZP2-XF40H□	40	42
ZP2-XF50H□	50	52

ZP2-XF$^{63}_{80}$H□

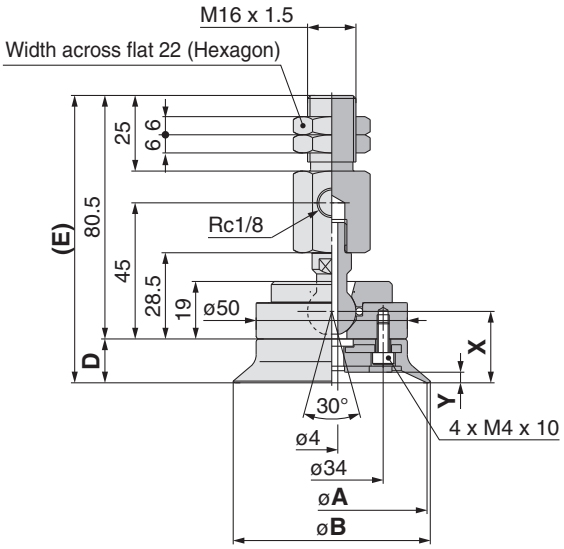

Dimensions

Model	A	B	D	E	X	Y
ZP2-XF63H□	63	65	14.5	95	23.6	3.5
ZP2-XF80H□	80	82	16.5	97	25.6	4.5

ZP2-XF$^{100}_{125}$H□

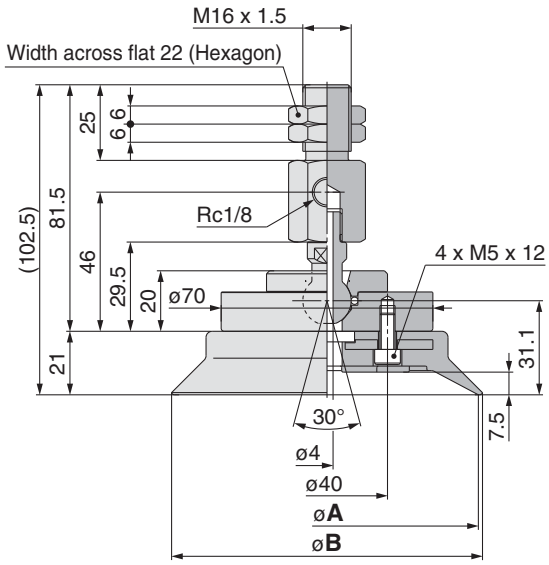

Dimensions

Model	A	B
ZP2-XF100H□	100	103
ZP2-XF125H□	125	128

How to Order

With buffer **ZP2 – T F 40 H N JB 25**

Vacuum inlet direction

Symbol	Direction
T	Vertical

Specification (mechanism)

Symbol	Specification
F	Ball joint

Pad diameter

Symbol	Pad diameter
40	ø40
50	ø50
63	ø63
80	ø80
100	ø100
125	ø125

Pad type

Symbol	Type
H	Heavy-duty (Flat with rib)

Pad material (□)

Symbol	Material
N	NBR
S	Silicone rubber
U	Urethane rubber
F	FKM
E	EPR

Buffer specification

Symbol	Specification
JB	Rotating With bushing Material: Brass
JF	Rotating With bushing Material: Steel

Buffer stroke (■)

Stroke \ Applicable pad	ZP40H ZP50H	ZP63H ZP80H	ZP100H ZP125H
25	●	●	●
50	●	●	●
75	●	●	●
100	—	●	●

Vacuum inlet direction **Vertical**

Replacement Part No.

Model	Pad unit part no.	Buffer assembly part no.	
ZP2-TF40H□(JB/JF)25	ZP40H□	ZP2B-TF1(JB/JF)25	With three M3 bolts
ZP2-TF40H□(JB/JF)50		ZP2B-TF1(JB/JF)50	
ZP2-TF40H□(JB/JF)75		ZP2B-TF1(JB/JF)75	
ZP2-TF50H□(JB/JF)25	ZP50H□	ZP2B-TF1(JB/JF)25	
ZP2-TF50H□(JB/JF)50		ZP2B-TF1(JB/JF)50	
ZP2-TF50H□(JB/JF)75		ZP2B-TF1(JB/JF)75	
ZP2-TF63H□(JB/JF)25	ZP63H□	ZP2B-TF2(JB/JF)25	With four M4 bolts
ZP2-TF63H□(JB/JF)50		ZP2B-TF2(JB/JF)50	
ZP2-TF63H□(JB/JF)75		ZP2B-TF2(JB/JF)75	
ZP2-TF63H□(JB/JF)100		ZP2B-TF2(JB/JF)100	
ZP2-TF80H□(JB/JF)25	ZP80H□	ZP2B-TF2(JB/JF)25	
ZP2-TF80H□(JB/JF)50		ZP2B-TF2(JB/JF)50	
ZP2-TF80H□(JB/JF)75		ZP2B-TF2(JB/JF)75	
ZP2-TF80H□(JB/JF)100		ZP2B-TF2(JB/JF)100	
ZP2-TF100H□(JB/JF)25	ZP100H□	ZP2B-TF3(JB/JF)25	With four M5 bolts
ZP2-TF100H□(JB/JF)50		ZP2B-TF3(JB/JF)50	
ZP2-TF100H□(JB/JF)75		ZP2B-TF3(JB/JF)75	
ZP2-TF100H□(JB/JF)100		ZP2B-TF3(JB/JF)100	
ZP2-TF125H□(JB/JF)25	ZP125H□	ZP2B-TF3(JB/JF)25	
ZP2-TF125H□(JB/JF)50		ZP2B-TF3(JB/JF)50	
ZP2-TF125H□(JB/JF)75		ZP2B-TF3(JB/JF)75	
ZP2-TF125H□(JB/JF)100		ZP2B-TF3(JB/JF)100	

Note) □ Indicates the pad material.

Buffer Specifications

Pad diameter		ø40, ø50	ø63, ø80, ø100, ø125
Stroke (mm)		25, 50, 75	25, 50, 75, 100
Spring reactive force	**At 0 stroke (N)**	6.9	10
	At buffer stroke (N)	11.8	15
Buffer specifications	**JB**	Rotating With bushing Buffer body material: Brass	
		Tightening torque: 30 N·m ±5%	Tightening torque: 45 N·m ±5%
	JF	Rotating With bushing Buffer body material: Steel	
		Tightening torque: 50 N·m ±5%	Tightening torque: 70 N·m ±5%

Dimensions: With Buffer

ZP2-TF$^{40}_{50}$H□$^{JB}_{JF}$■

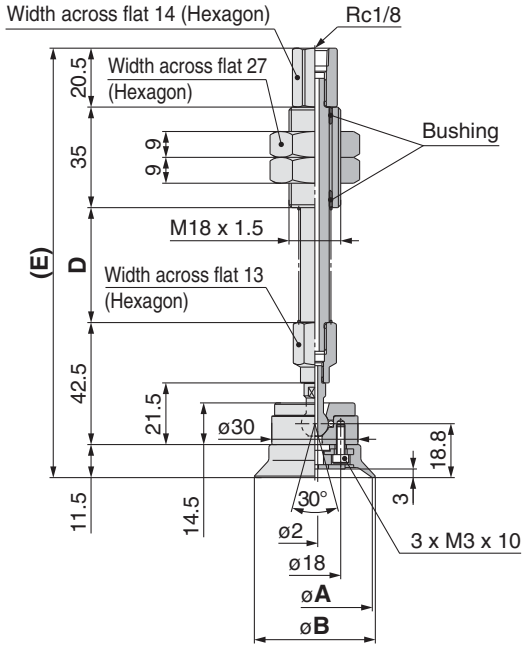

Dimensions

Model	A	B	D	E
ZP2-TF40H□(JB/JF)25			40	149.5
ZP2-TF40H□(JB/JF)50	40	42	75	184.5
ZP2-TF40H□(JB/JF)75			111	220.5
ZP2-TF50H□(JB/JF)25			40	149.5
ZP2-TF50H□(JB/JF)50	50	52	75	184.5
ZP2-TF50H□(JB/JF)75			111	220.5

ZP2-TF$^{63}_{80}$H□$^{JB}_{JF}$■

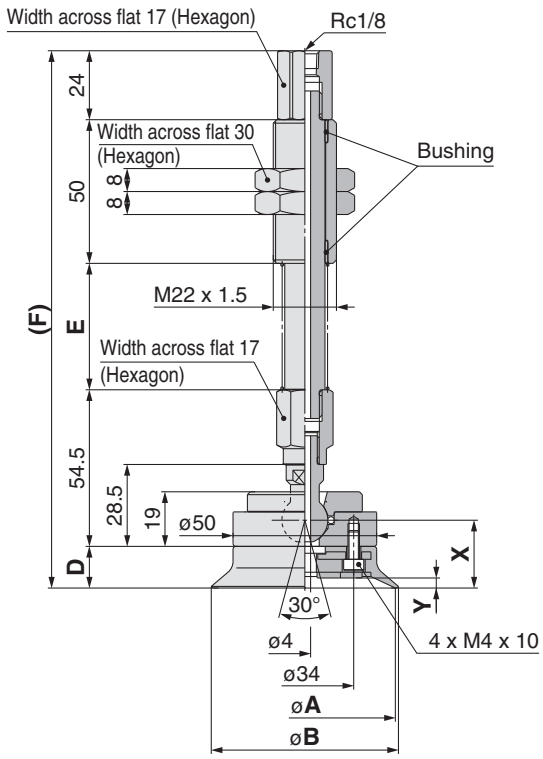

Dimensions

Model	A	B	D	E	F	X	Y
ZP2-TF63H□(JB/JF)25	63	65	14.5	44	187	23.6	3.5
ZP2-TF63H□(JB/JF)50				80	223		
ZP2-TF63H□(JB/JF)75				120	263		
ZP2-TF63H□(JB/JF)100				155	298		
ZP2-TF80H□(JB/JF)25	80	82	16.5	44	189	25.6	4.5
ZP2-TF80H□(JB/JF)50				80	225		
ZP2-TF80H□(JB/JF)75				120	265		
ZP2-TF80H□(JB/JF)100				155	300		

ZP2-TF$^{100}_{125}$H□$^{JB}_{JF}$■

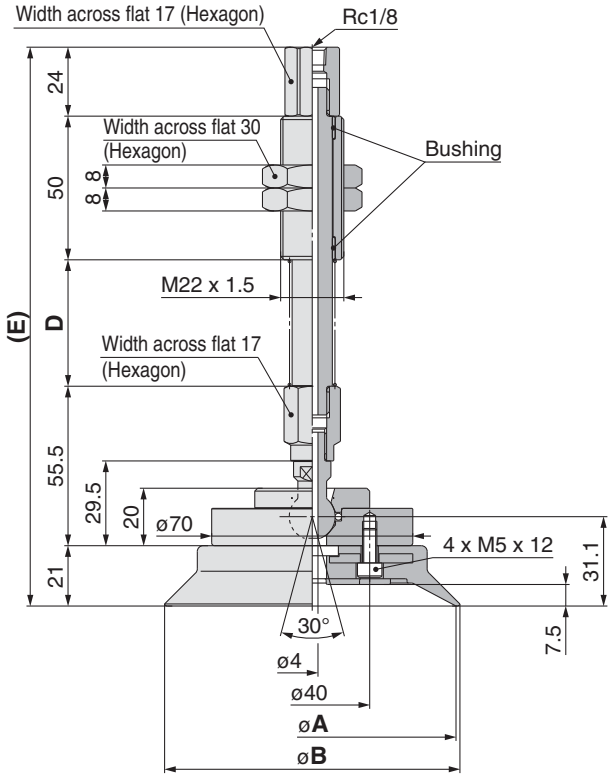

Dimensions

Model	A	B	D	E
ZP2-TF100H□(JB/JF)25	100	103	44	194.5
ZP2-TF100H□(JB/JF)50			80	230.5
ZP2-TF100H□(JB/JF)75			120	270.5
ZP2-TF100H□(JB/JF)100			155	305.5
ZP2-TF125H□(JB/JF)25	125	128	44	194.5
ZP2-TF125H□(JB/JF)50			80	230.5
ZP2-TF125H□(JB/JF)75			120	270.5
ZP2-TF125H□(JB/JF)100			155	305.5

How to Order

With buffer **ZP2 − X F 40 H N JB 25**

Vacuum inlet direction

Symbol	Direction
X	Lateral

Specification (mechanism)

Symbol	Specification
F	Ball joint

Pad diameter

Symbol	Pad diameter
40	ø40
50	ø50
63	ø63
80	ø80
100	ø100
125	ø125

Pad type

Symbol	Type
H	Heavy-duty (Flat with rib)

Pad material (□)

Symbol	Material
N	NBR
S	Silicone rubber
U	Urethane rubber
F	FKM
E	EPR

Buffer specification

Symbol	Specification
JB	Rotating With bushing Material: Brass
JF	Rotating With bushing Material: Steel

Buffer stroke (■)

Stroke \ Applicable pad	ZP40H ZP50H	ZP63H ZP80H	ZP100H ZP125H
25	●	●	●
50	●	●	●
75	●	●	●
100	—	●	●

Vacuum inlet direction **Lateral**

Replacement Part No.

Model	Pad unit part no.	Buffer assembly part no.	
ZP2-XF40H□(JB/JF)25	ZP40H□	ZP2B-XF1(JB/JF)25	With three M3 bolts
ZP2-XF40H□(JB/JF)50		ZP2B-XF1(JB/JF)50	
ZP2-XF40H□(JB/JF)75		ZP2B-XF1(JB/JF)75	
ZP2-XF50H□(JB/JF)25	ZP50H□	ZP2B-XF1(JB/JF)25	
ZP2-XF50H□(JB/JF)50		ZP2B-XF1(JB/JF)50	
ZP2-XF50H□(JB/JF)75		ZP2B-XF1(JB/JF)75	
ZP2-XF63H□(JB/JF)25	ZP63H□	ZP2B-XF2(JB/JF)25	With four M4 bolts
ZP2-XF63H□(JB/JF)50		ZP2B-XF2(JB/JF)50	
ZP2-XF63H□(JB/JF)75		ZP2B-XF2(JB/JF)75	
ZP2-XF63H□(JB/JF)100		ZP2B-XF2(JB/JF)100	
ZP2-XF80H□(JB/JF)25	ZP80H□	ZP2B-XF2(JB/JF)25	
ZP2-XF80H□(JB/JF)50		ZP2B-XF2(JB/JF)50	
ZP2-XF80H□(JB/JF)75		ZP2B-XF2(JB/JF)75	
ZP2-XF80H□(JB/JF)100		ZP2B-XF2(JB/JF)100	
ZP2-XF100H□(JB/JF)25	ZP100H□	ZP2B-XF3(JB/JF)25	With four M5 bolts
ZP2-XF100H□(JB/JF)50		ZP2B-XF3(JB/JF)50	
ZP2-XF100H□(JB/JF)75		ZP2B-XF3(JB/JF)75	
ZP2-XF100H□(JB/JF)100		ZP2B-XF3(JB/JF)100	
ZP2-XF125H□(JB/JF)25	ZP125H□	ZP2B-XF3(JB/JF)25	
ZP2-XF125H□(JB/JF)50		ZP2B-XF3(JB/JF)50	
ZP2-XF125H□(JB/JF)75		ZP2B-XF3(JB/JF)75	
ZP2-XF125H□(JB/JF)100		ZP2B-XF3(JB/JF)100	

Note) □ Indicates the pad material.

Buffer Specifications

Pad diameter		ø40, ø50	ø63, ø80, ø100, ø125
Stroke (mm)		25, 50, 75	25, 50, 75, 100
Spring reactive force	At 0 stroke (N)	6.9	10
	At buffer stroke (N)	11.8	15
Buffer specifications	JB	Rotating With bushing Buffer body material: Brass	
		Tightening torque: 30 N·m ±5%	Tightening torque: 45 N·m ±5%
	JF	Rotating With bushing Buffer body material: Steel	
		Tightening torque: 50 N·m ±5%	Tightening torque: 75 N·m ±5%

Dimensions: With Buffer

ZP2-XF$^{40}_{50}$H□$^{JB}_{JF}$■

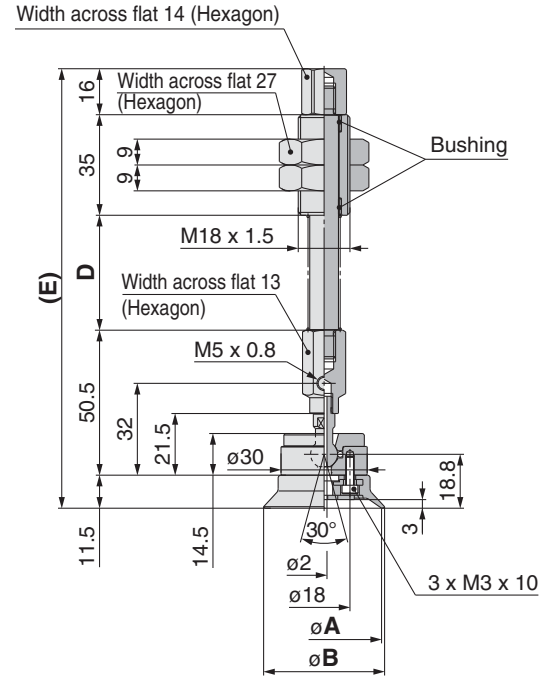

Dimensions

Model	A	B	D	E
ZP2-XF40H□(JB/JF)25	40	42	40	153
ZP2-XF40H□(JB/JF)50			75	188
ZP2-XF40H□(JB/JF)75			111	224
ZP2-XF50H□(JB/JF)25	50	52	40	153
ZP2-XF50H□(JB/JF)50			75	188
ZP2-XF50H□(JB/JF)75			111	224

ZP2-XF$^{63}_{80}$H□$^{JB}_{JF}$■

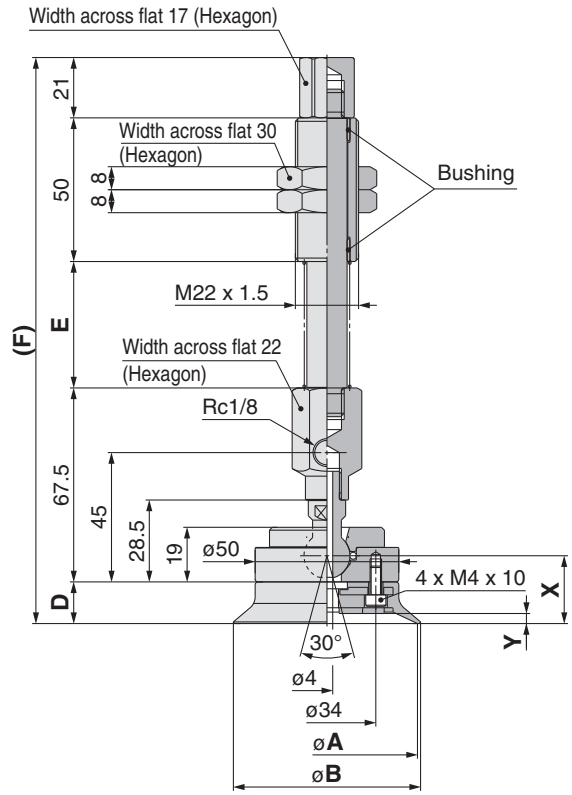

Dimensions

Model	A	B	D	E	F	X	Y
ZP2-XF63H□(JB/JF)25	63	65	14.5	44	197	23.6	3.5
ZP2-XF63H□(JB/JF)50				80	233		
ZP2-XF63H□(JB/JF)75				120	273		
ZP2-XF63H□(JB/JF)100				155	308		
ZP2-XF80H□(JB/JF)25	80	82	16.5	44	199	25.6	4.5
ZP2-XF80H□(JB/JF)50				80	235		
ZP2-XF80H□(JB/JF)75				120	275		
ZP2-XF80H□(JB/JF)100				155	310		

ZP2-XF$^{100}_{125}$H□$^{JB}_{JF}$■

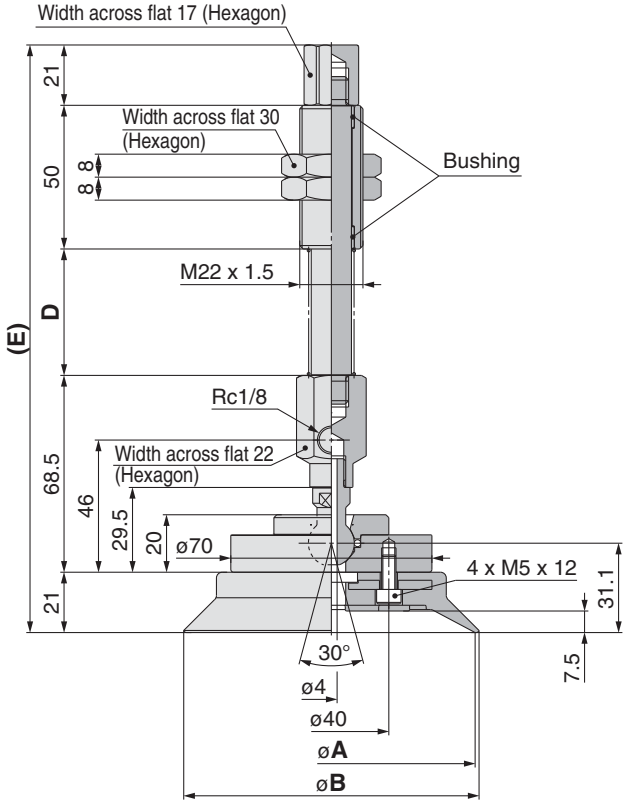

Dimensions

Model	A	B	D	E
ZP2-XF100H□(JB/JF)25	100	103	44	204.5
ZP2-XF100H□(JB/JF)50			80	240.5
ZP2-XF100H□(JB/JF)75			120	280.5
ZP2-XF100H□(JB/JF)100			155	315.5
ZP2-XF125H□(JB/JF)25	125	128	44	204.5
ZP2-XF125H□(JB/JF)50			80	240.5
ZP2-XF125H□(JB/JF)75			120	280.5
ZP2-XF125H□(JB/JF)100			155	315.5

Heavy-duty Ball Joint Pad

Pad diameter ø40, ø50, ø63, ø80, ø100, ø125

Symbol/Type

HB: Heavy-duty (Bellows)

■ For adsorption of workpieces with inclined or curved surface

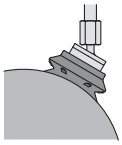

Replacement Part No.

Model	Pad unit part no.	Adapter assembly part no.	
ZP2-TF40HB□	ZP40HB□	ZP2A-TF1	With three M3 bolts
ZP2-TF50HB□	ZP50HB□		
ZP2-TF63HB□	ZP63HB□	ZP2A-TF2	With four M4 bolts
ZP2-TF80HB□	ZP80HB□		
ZP2-TF100HB□	ZP100HB□	ZP2A-TF3	With four M5 bolts
ZP2-TF125HB□	ZP125HB□		

Note) □ Indicates the pad material.

How to Order

With adapter **ZP2 – T F 40 HB N**

Vacuum inlet direction

Symbol	Direction
T	Vertical

Specification (mechanism)

Symbol	Specification
F	Ball joint

Pad diameter

Symbol	Pad diameter
40	ø40
50	ø50
63	ø63
80	ø80
100	ø100
125	ø125

Pad type

Symbol	Type
HB	Heavy-duty (Bellows)

Vacuum inlet direction **Vertical**

Pad material (□)

Symbol	Material
N	NBR
S	Silicone rubber
U	Urethane rubber
F	FKM
E	EPR

Dimensions: With Adapter

ZP2-TF$^{40}_{50}$HB□

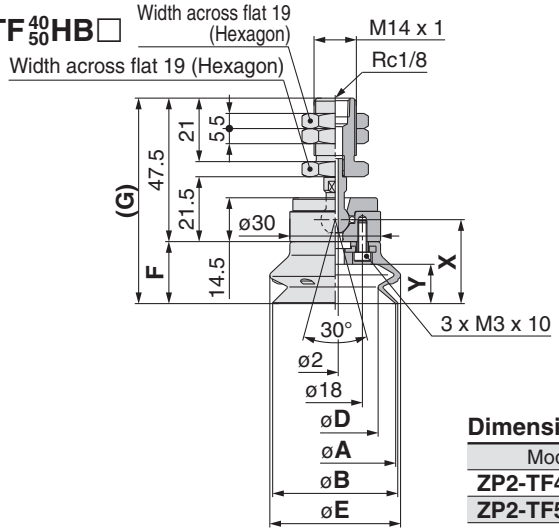

Dimensions

Model	A	B	D	E	F	G	X	Y
ZP2-TF40HB□	40	41	28	43	20.5	68	27.8	13
ZP2-TF50HB□	50	52	36	54	24	71.5	31.3	16.5

ZP2-TF$^{63}_{80}$HB□

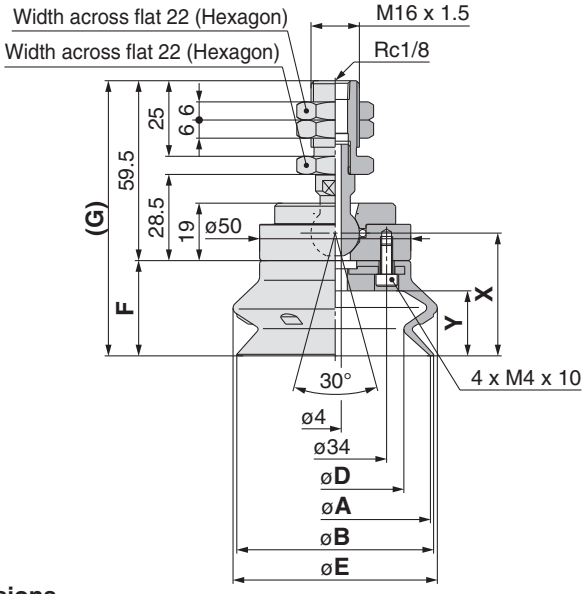

Dimensions

Model	A	B	D	E	F	G	X	Y
ZP2-TF63HB□	63	65	46	68	31.5	91	40.6	21
ZP2-TF80HB□	80	83	58	85	37	96.5	46.1	27.5

ZP2-TF$^{100}_{125}$HB□

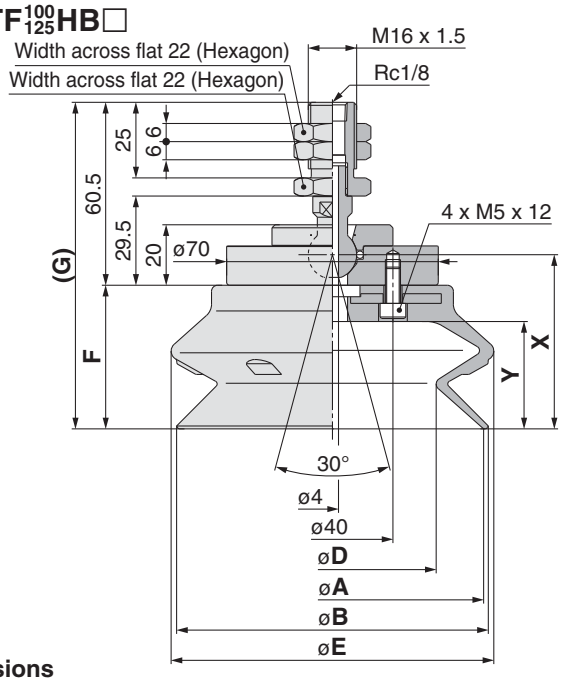

Dimensions

Model	A	B	D	E	F	G	X	Y
ZP2-TF100HB□	100	103	69	107	47.5	108	57.6	35.5
ZP2-TF125HB□	125	129	89	135	56	116.5	66.1	44

How to Order

With adapter **ZP2 − X F 40 HB N**

Vacuum inlet direction

Symbol	Direction
X	Lateral

Specification (mechanism)

Symbol	Specification
F	Ball joint

Pad diameter

Symbol	Pad diameter
40	ø40
50	ø50
63	ø63
80	ø80
100	ø100
125	ø125

Pad type

Symbol	Type
HB	Heavy-duty (Bellows)

Pad material (□)

Symbol	Material
N	NBR
S	Silicone rubber
U	Urethane rubber
F	FKM
E	EPR

Vacuum inlet direction **Lateral**

Replacement Part No.

Model	Pad unit part no.	Adapter assembly part no.	
ZP2-XF40HB□	ZP40HB□	ZP2A-XF1	With three M3 bolts
ZP2-XF50HB□	ZP50HB□		
ZP2-XF63HB□	ZP63HB□	ZP2A-XF2	With four M4 bolts
ZP2-XF80HB□	ZP80HB□		
ZP2-XF100HB□	ZP100HB□	ZP2A-XF3	With four M5 bolts
ZP2-XF125HB□	ZP125HB□		

Note) □ Indicates the pad material.

Dimensions: With Adapter

ZP2-XF$^{40}_{50}$HB□

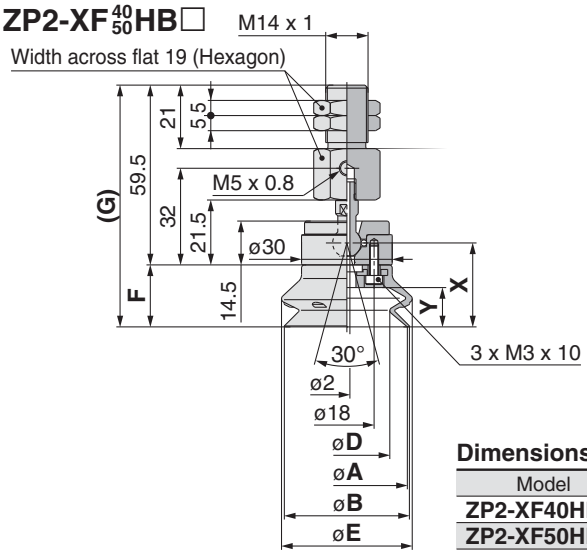

Dimensions

Model	A	B	D	E	F	G	X	Y
ZP2-XF40HB□	40	41	28	43	20.5	80	27.8	13
ZP2-XF50HB□	50	52	36	54	24	83.5	31.3	16.5

ZP2-XF$^{63}_{80}$HB□

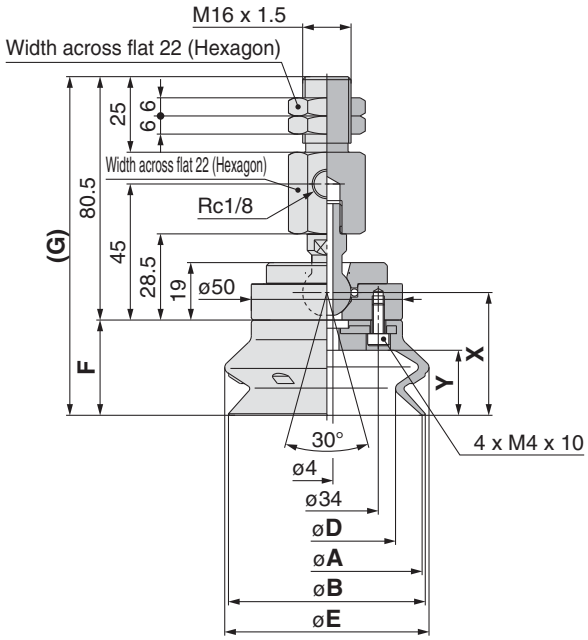

Dimensions

Model	A	B	D	E	F	G	X	Y
ZP2-XF63HB□	63	65	46	68	31.5	112	40.6	21.5
ZP2-XF80HB□	80	83	58	85	37	117.5	46.1	27.5

ZP2-XF$^{100}_{125}$HB□

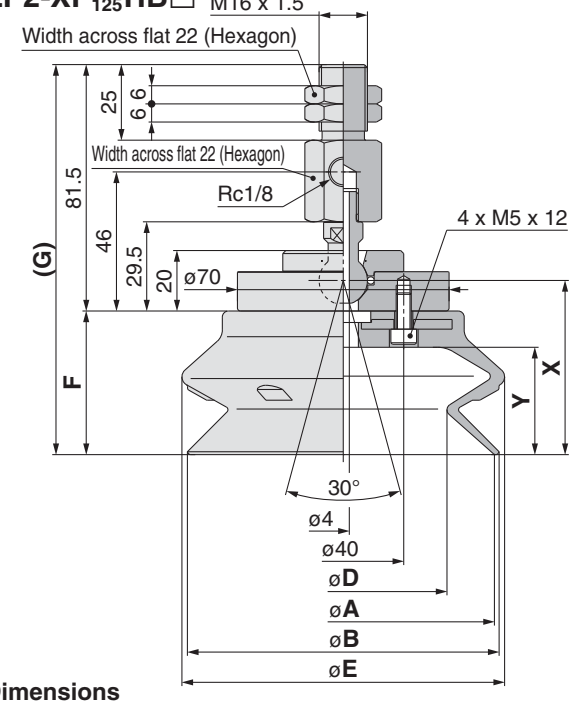

Dimensions

Model	A	B	D	E	F	G	X	Y
ZP2-XF100HB□	100	103	69	107	47.5	129	57.6	35.5
ZP2-XF125HB□	125	129	89	135	56	137.5	66.1	44

How to Order

With buffer ZP2 − T F 40 HB N JB 25

Vacuum inlet direction

Symbol	Direction
T	Vertical

Specification (mechanism)

Symbol	Specification
F	Ball joint

Pad diameter

Symbol	Pad diameter
40	ø40
50	ø50
63	ø63
80	ø80
100	ø100
125	ø125

Pad type

Symbol	Type
HB	Heavy-duty (Bellows)

Pad material (□)

Symbol	Material
N	NBR
S	Silicone rubber
U	Urethane rubber
F	FKM
E	EPR

Buffer specification

Symbol	Specification
JB	Rotating With bushing Material: Brass
JF	Rotating With bushing Material: Steel

Buffer stroke (■)

Stroke \ Applicable pad	ZP40HB ZP50HB	ZP63HB ZP80HB	ZP100HB ZP125HB
25	●	●	●
50	●	●	●
75	●	●	●
100	—	●	●

Vacuum inlet direction **Vertical**

Replacement Part No.

Model	Pad unit part no.	Buffer assembly part no.	
ZP2-TF40HB□(JB/JF)25	ZP40HB□	ZP2B-TF1(JB/JF)25	With three M3 bolts
ZP2-TF40HB□(JB/JF)50		ZP2B-TF1(JB/JF)50	
ZP2-TF40HB□(JB/JF)75		ZP2B-TF1(JB/JF)75	
ZP2-TF50HB□(JB/JF)25	ZP50HB□	ZP2B-TF1(JB/JF)25	
ZP2-TF50HB□(JB/JF)50		ZP2B-TF1(JB/JF)50	
ZP2-TF50HB□(JB/JF)75		ZP2B-TF1(JB/JF)75	
ZP2-TF63HB□(JB/JF)25	ZP63HB□	ZP2B-TF2(JB/JF)25	With four M4 bolts
ZP2-TF63HB□(JB/JF)50		ZP2B-TF2(JB/JF)50	
ZP2-TF63HB□(JB/JF)75		ZP2B-TF2(JB/JF)75	
ZP2-TF63HB□(JB/JF)100		ZP2B-TF2(JB/JF)100	
ZP2-TF80HB□(JB/JF)25	ZP80HB□	ZP2B-TF2(JB/JF)25	
ZP2-TF80HB□(JB/JF)50		ZP2B-TF2(JB/JF)50	
ZP2-TF80HB□(JB/JF)75		ZP2B-TF2(JB/JF)75	
ZP2-TF80HB□(JB/JF)100		ZP2B-TF2(JB/JF)100	
ZP2-TF100HB□(JB/JF)25	ZP100HB□	ZP2B-TF3(JB/JF)25	With four M5 bolts
ZP2-TF100HB□(JB/JF)50		ZP2B-TF3(JB/JF)50	
ZP2-TF100HB□(JB/JF)75		ZP2B-TF3(JB/JF)75	
ZP2-TF100HB□(JB/JF)100		ZP2B-TF3(JB/JF)100	
ZP2-TF125HB□(JB/JF)25	ZP125HB□	ZP2B-TF3(JB/JF)25	
ZP2-TF125HB□(JB/JF)50		ZP2B-TF3(JB/JF)50	
ZP2-TF125HB□(JB/JF)75		ZP2B-TF3(JB/JF)75	
ZP2-TF125HB□(JB/JF)100		ZP2B-TF3(JB/JF)100	

Note) □ Indicates the pad material.

Buffer Specifications

Pad diameter		ø40, ø50	ø63, ø80, ø100, ø125
Stroke (mm)		25, 50, 75	25, 50, 75, 100
Spring reactive force	At 0 stroke (N)	6.9	10
	At buffer stroke (N)	11.8	15
Buffer specifications	JB	Rotating With bushing Buffer body material: Brass	
		Tightening torque: 30 N·m ±5%	Tightening torque: 45 N·m ±5%
	JF	Rotating With bushing Buffer body material: Steel	
		Tightening torque: 50 N·m ±5%	Tightening torque: 75 N·m ±5%

Dimensions: With Buffer

ZP2-TF$^{40}_{50}$HB□$^{JB}_{JF}$■

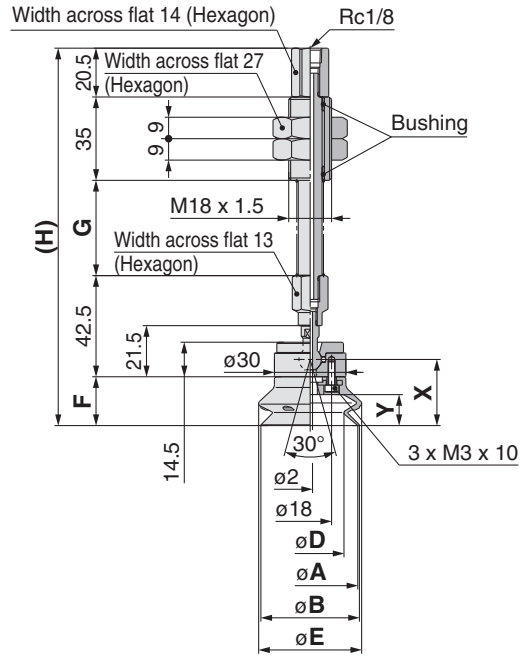

Dimensions

Model	A	B	D	E	F	G	H	X	Y
ZP2-TF40HB□(JB/JF)25						40	158.5		
ZP2-TF40HB□(JB/JF)50	40	42	28	43	20.5	75	193.5	27.8	13
ZP2-TF40HB□(JB/JF)75						111	229.5		
ZP2-TF50HB□(JB/JF)25						40	162		
ZP2-TF50HB□(JB/JF)50	50	52	36	54	24	75	197	31.3	16.5
ZP2-TF50HB□(JB/JF)75						111	233		

ZP2-TF$^{63}_{80}$HB□$^{JB}_{JF}$■

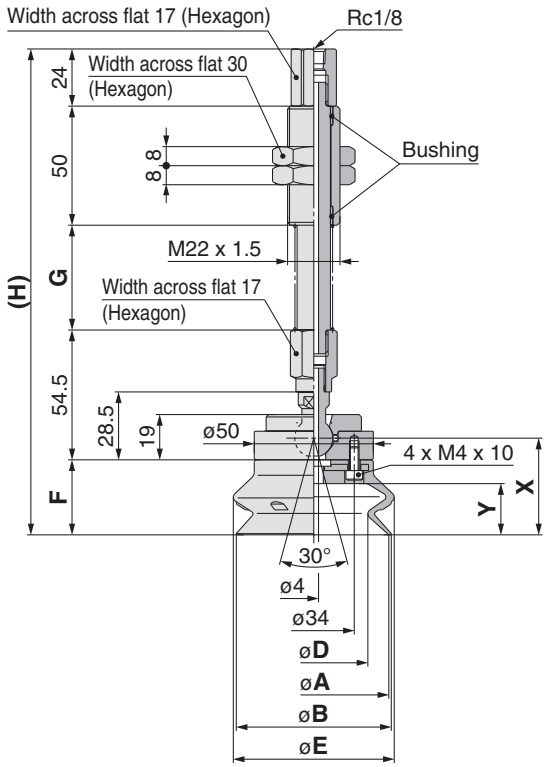

Dimensions

Model	A	B	D	E	F	G	H	X	Y
ZP2-TF63HB□(JB/JF)25						44	204		
ZP2-TF63HB□(JB/JF)50	63	65	46	68	31.5	80	240	40.6	21.5
ZP2-TF63HB□(JB/JF)75						120	280		
ZP2-TF63HB□(JB/JF)100						155	315		
ZP2-TF80HB□(JB/JF)25						44	209.5		
ZP2-TF80HB□(JB/JF)50	80	83	58	85	37	80	245.5	46.1	27.5
ZP2-TF80HB□(JB/JF)75						120	285.5		
ZP2-TF80HB□(JB/JF)100						155	320.5		

ZP2-TF$^{100}_{125}$HB□$^{JB}_{JF}$■

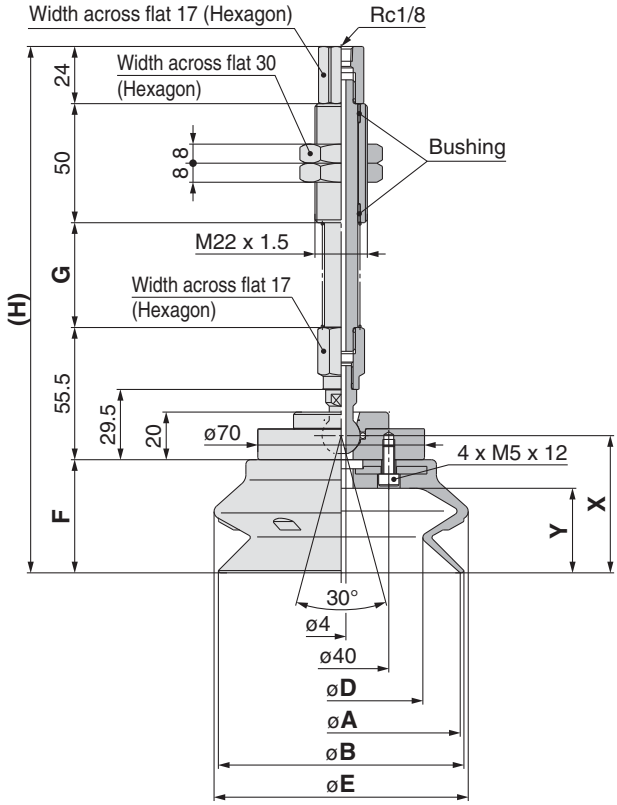

Dimensions

Model	A	B	D	E	F	G	H	X	Y
ZP2-TF100HB□(JB/JF)25						44	221		
ZP2-TF100HB□(JB/JF)50	100	103	69	107	47.5	80	257	57.6	35.5
ZP2-TF100HB□(JB/JF)75						120	297		
ZP2-TF100HB□(JB/JF)100						155	332		
ZP2-TF125HB□(JB/JF)25						44	229.5		
ZP2-TF125HB□(JB/JF)50	125	129	89	135	56	80	265.5	66.1	44
ZP2-TF125HB□(JB/JF)75						120	305.5		
ZP2-TF125HB□(JB/JF)100						155	340.5		

How to Order

With buffer **ZP2 − X F 40 HB N JB 25**

Vacuum inlet direction

Symbol	Direction
X	Lateral

Specification (mechanism)

Symbol	Specification
F	Ball joint

Pad diameter

Symbol	Pad diameter
40	ø40
50	ø50
63	ø63
80	ø80
100	ø100
125	ø125

Pad type

Symbol	Type
HB	Heavy-duty (Bellows)

Pad material (□)

Symbol	Material
N	NBR
S	Silicone rubber
U	Urethane rubber
F	FKM
E	EPR

Buffer specification

Symbol	Specification
JB	Rotating With bushing Material: Brass
JF	Rotating With bushing Material: Steel

Buffer stroke (■)

Stroke \ Applicable pad	ZP40HB ZP50HB	ZP63HB ZP80HB	ZP100HB ZP125HB
25	●	●	●
50	●	●	●
75	●	●	●
100	—	●	●

Vacuum inlet direction **Lateral**

Replacement Part No.

Model	Pad unit part no.	Buffer assembly part no.	
ZP2-XF40HB□(JB/JF)25	ZP40HB□	ZP2B-XF1(JB/JF)25	With three M3 bolts
ZP2-XF40HB□(JB/JF)50		ZP2B-XF1(JB/JF)50	
ZP2-XF40HB□(JB/JF)75		ZP2B-XF1(JB/JF)75	
ZP2-XF50HB□(JB/JF)25	ZP50HB□	ZP2B-XF1(JB/JF)25	
ZP2-XF50HB□(JB/JF)50		ZP2B-XF1(JB/JF)50	
ZP2-XF50HB□(JB/JF)75		ZP2B-XF1(JB/JF)75	
ZP2-XF63HB□(JB/JF)25	ZP63HB□	ZP2B-XF2(JB/JF)25	With four M4 bolts
ZP2-XF63HB□(JB/JF)50		ZP2B-XF2(JB/JF)50	
ZP2-XF63HB□(JB/JF)75		ZP2B-XF2(JB/JF)75	
ZP2-XF63HB□(JB/JF)100		ZP2B-XF2(JB/JF)100	
ZP2-XF80HB□(JB/JF)25	ZP80HB□	ZP2B-XF2(JB/JF)25	
ZP2-XF80HB□(JB/JF)50		ZP2B-XF2(JB/JF)50	
ZP2-XF80HB□(JB/JF)75		ZP2B-XF2(JB/JF)75	
ZP2-XF80HB□(JB/JF)100		ZP2B-XF2(JB/JF)100	
ZP2-XF100HB□(JB/JF)25	ZP100HB□	ZP2B-XF3(JB/JF)25	With four M5 bolts
ZP2-XF100HB□(JB/JF)50		ZP2B-XF3(JB/JF)50	
ZP2-XF100HB□(JB/JF)75		ZP2B-XF3(JB/JF)75	
ZP2-XF100HB□(JB/JF)100		ZP2B-XF3(JB/JF)100	
ZP2-XF125HB□(JB/JF)25	ZP125HB□	ZP2B-XF3(JB/JF)25	
ZP2-XF125HB□(JB/JF)50		ZP2B-XF3(JB/JF)50	
ZP2-XF125HB□(JB/JF)75		ZP2B-XF3(JB/JF)75	
ZP2-XF125HB□(JB/JF)100		ZP2B-XF3(JB/JF)100	

Note) □ Indicates the pad material.

Buffer Specifications

Pad diameter		ø40, ø50	ø63, ø80, ø100, ø125
Stroke (mm)		25, 50, 75	25, 50, 75, 100
Spring reactive force	At 0 stroke (N)	6.9	10
	At buffer stroke (N)	11.8	15
Buffer specifications	JB	Rotating With bushing Buffer body material: Brass	
		Tightening torque: 30 N·m ±5%	Tightening torque: 45 N·m ±5%
	JF	Rotating With bushing Buffer body material: Steel	
		Tightening torque: 50 N·m ±5%	Tightening torque: 75 N·m ±5%

Dimensions: With Buffer

ZP2-XF$^{40}_{50}$HB□$^{JB}_{JF}$■

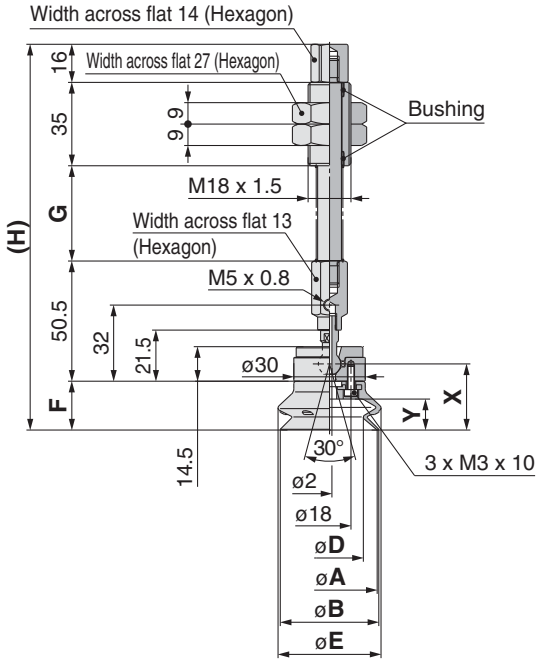

Dimensions

Model	A	B	D	E	F	G	H	X	Y
ZP2-XF40HB□(JB/JF)25						40	162		
ZP2-XF40HB□(JB/JF)50	40	42	28	43	20.5	75	197	27.8	13
ZP2-XF40HB□(JB/JF)75						111	233		
ZP2-XF50HB□(JB/JF)25						40	165.5		
ZP2-XF50HB□(JB/JF)50	50	52	36	54	24	75	200.5	31.3	16.5
ZP2-XF50HB□(JB/JF)75						111	236.5		

ZP2-XF$^{63}_{80}$HB□$^{JB}_{JF}$■

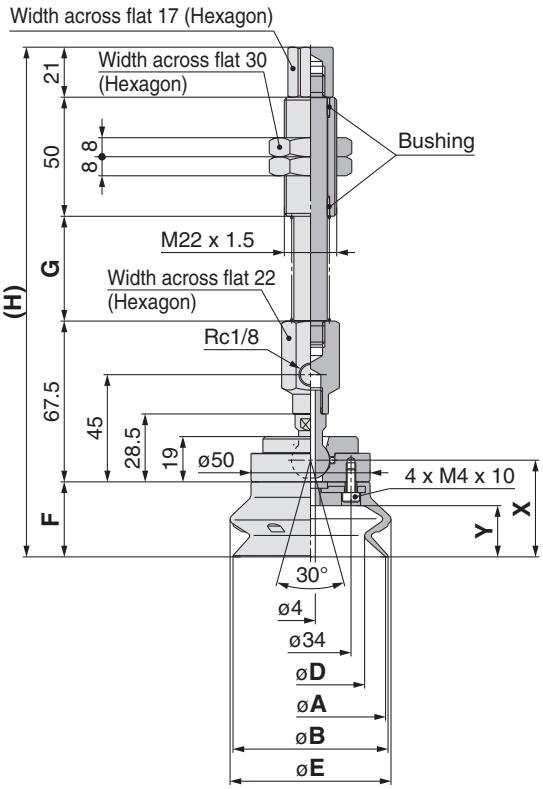

Dimensions

Model	A	B	D	E	F	G	H	X	Y
ZP2-XF63HB□(JB/JF)25						44	214		
ZP2-XF63HB□(JB/JF)50	63	65	46	68	31.5	80	250	40.6	21.5
ZP2-XF63HB□(JB/JF)75						120	290		
ZP2-XF63HB□(JB/JF)100						155	325		
ZP2-XF80HB□(JB/JF)25						44	219.5		
ZP2-XF80HB□(JB/JF)50	80	83	58	85	37	80	255.5	46.1	27.5
ZP2-XF80HB□(JB/JF)75						120	295.5		
ZP2-XF80HB□(JB/JF)100						155	330.5		

ZP2-XF$^{100}_{125}$HB□$^{JB}_{JF}$■

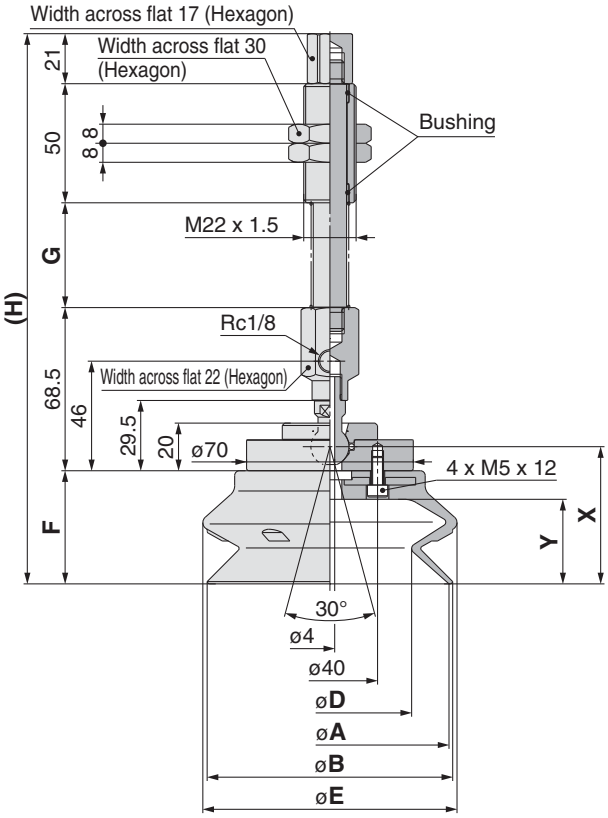

Dimensions

Model	A	B	D	E	F	G	H	X	Y
ZP2-XF100HB□(JB/JF)25						44	231		
ZP2-XF100HB□(JB/JF)50	100	103	69	107	47.5	80	267	57.6	35.5
ZP2-XF100HB□(JB/JF)75						120	307		
ZP2-XF100HB□(JB/JF)100						155	342		
ZP2-XF125HB□(JB/JF)25						44	239.5		
ZP2-XF125HB□(JB/JF)50	125	129	89	135	56	80	275.5	66.1	44
ZP2-XF125HB□(JB/JF)75						120	315.5		
ZP2-XF125HB□(JB/JF)100						155	350.5		

Heavy-duty Pad

Pad diameter ø40, ø50, ø63, ø80, ø100, ø125

Symbol/Type
H: Heavy-duty (Flat with rib)
HB: Heavy-duty (Bellows)

■ **Reinforced pad prevents deformation when transferring heavy or large workpieces.**

How to Order

Pad unit ZP 40 H N

Pad diameter

Symbol	Pad diameter
40	ø40
50	ø50
63	ø63
80	ø80
100	ø100
125	ø125

Pad material

Symbol	Material
N	NBR
S	Silicone rubber
U	Urethane rubber
F	FKM
E	EPR

Pad type

Symbol	Type
H	Heavy-duty (Flat with rib)
HB	Heavy-duty (Bellows)

Dimensions: Pad Unit

ZP$^{40}_{50}$H□

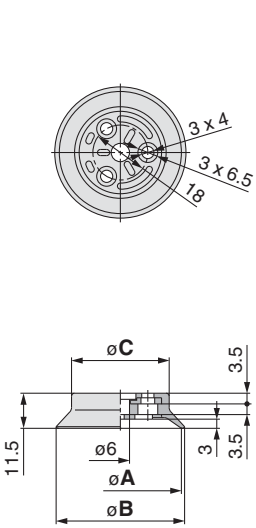

Dimensions

Model	A	B	C
ZP40H□	40	42	32
ZP50H□	50	52	42

ZP$^{63}_{80}$H□

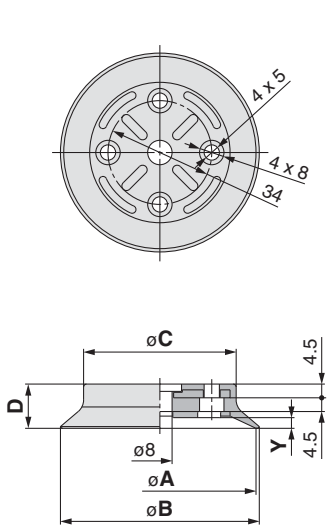

Dimensions

Model	A	B	C	D	Y
ZP63H□	63	65	50	14.5	3.5
ZP80H□	80	82	61	16.5	4.5

ZP$^{100}_{125}$H□

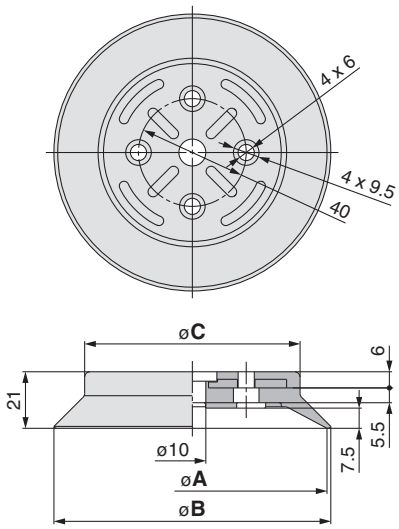

Dimensions

Model	A	B	C
ZP100H□	100	103	80
ZP125H□	125	128	104

ZP$^{40}_{50}$HB□

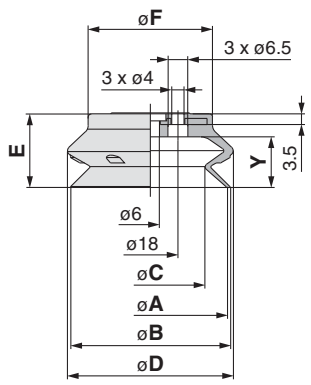

Dimensions

Model	A	B	C	D	E	F	Y
ZP40HB□	40	41	28	43	20.5	30	13
ZP50HB□	50	52	36	54	24	40.5	16.5

ZP$^{63}_{80}$HB□

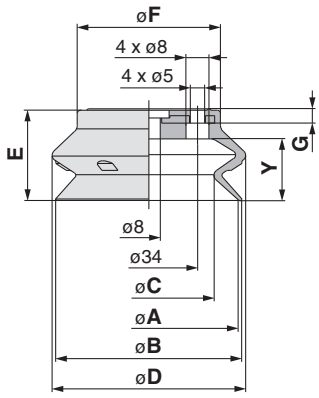

Dimensions

Model	A	B	C	D	E	F	G	Y
ZP63HB□	63	65	46	68	31.5	50	4.5	21.5
ZP80HB□	80	83	58	85	37	64	5	27.5

ZP$^{100}_{125}$HB□

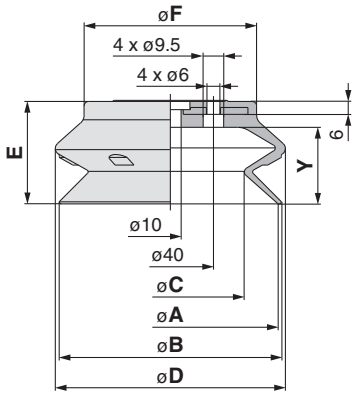

Dimensions

Model	A	B	C	D	E	F	Y
ZP100HB□	100	103	69	107	47.5	80	35.5
ZP125HB□	125	129	89	135	56	105	44

How to Order

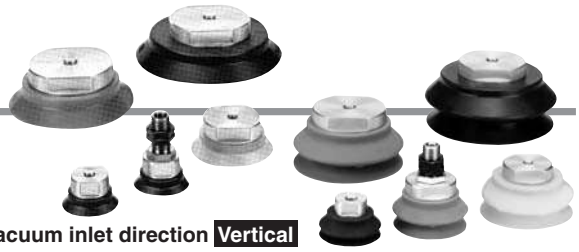

With adapter **ZPT 40 H N − A14**

Pad diameter

Symbol	Pad diameter
40	ø40
50	ø50
63	ø63
80	ø80
100	ø100
125	ø125

Pad type (∗)

Symbol	Type
H	Heavy-duty (Flat with rib)
HB	Heavy-duty (Bellows)

Pad material (□)

Symbol	Material
N	NBR
S	Silicone rubber
U	Urethane rubber
F	FKM
E	EPR

Mounting thread size (Vacuum inlet)

			Symbol	Thread size	Pad diameter ø40, ø50	ø63, ø80	ø100, ø125
Mounting	Male thread	M14 x 1	**A14**	Rc1/8	●	—	—
			A14N	NPT1/8	●	—	—
			A14T	NPTF1/8	●	—	—
		M16 x 1.5	**A16**	Rc1/8	—	●	●
			A16N	NPT1/8	—	●	●
			A16T	NPTF1/8	—	●	●
	Female thread		**B8**	M8 x 1.25	●	●	—
			B10	M10 x 1.5	●	●	—
			B12	M12 x 1.75	—	●	●
			B16	M16 x 1.5	—	●	●

Vacuum inlet direction **Vertical**

Replacement Part No.

Model	Pad unit part no.	Adapter assembly part no.	
ZPT40∗□-A14	ZP40∗□	ZPA-T1-B01	With three M3 bolts
ZPT40∗□-A14N		ZPA-T1-N01	
ZPT40∗□-A14T		ZPA-T1-T01	
ZPT50∗□-A14	ZP50∗□	ZPA-T1-B01	
ZPT50∗□-A14N		ZPA-T1-N01	
ZPT50∗□-A14T		ZPA-T1-T01	
ZPT63∗□-A16	ZP63∗□	ZPA-T2-B01	With four M4 bolts
ZPT63∗□-A16N		ZPA-T2-N01	
ZPT63∗□-A16T		ZPA-T2-T01	
ZPT80∗□-A16	ZP80∗□	ZPA-T2-B01	
ZPT80∗□-A16N		ZPA-T2-N01	
ZPT80∗□-A16T		ZPA-T2-T01	
ZPT100∗□-A16	ZP100∗□	ZPA-T3-B01	With four M5 bolts
ZPT100∗□-A16N		ZPA-T3-N01	
ZPT100∗□-A16T		ZPA-T3-T01	
ZPT125∗□-A16	ZP125∗□	ZPA-T3-B01	
ZPT125∗□-A16N		ZPA-T3-N01	
ZPT125∗□-A16T		ZPA-T3-T01	

Model	Pad unit part no.	Adapter assembly part no.	
ZPT40∗□-B8	ZP40∗□	ZPA-T1-B8	With three M3 bolts
ZPT40∗□-B10		ZPA-T1-B10	
ZPT50∗□-B8	ZP50∗□	ZPA-T1-B8	
ZPT50∗□-B10		ZPA-T1-B10	
ZPT63∗□-B8	ZP63∗□	ZPA-T2-B8	With four M4 bolts
ZPT63∗□-B10		ZPA-T2-B10	
ZPT63∗□-B12		ZPA-T2-B12	
ZPT63∗□-B16		ZPA-T2-B16	
ZPT80∗□-B8	ZP80∗□	ZPA-T2-B8	
ZPT80∗□-B10		ZPA-T2-B10	
ZPT80∗□-B12		ZPA-T2-B12	
ZPT80∗□-B16		ZPA-T2-B16	
ZPT100∗□-B12	ZP100∗□	ZPA-T3-B12	With four M5 bolts
ZPT100∗□-B16		ZPA-T3-B16	
ZPT125∗□-B12	ZP125∗□	ZPA-T3-B12	
ZPT125∗□-B16		ZPA-T3-B16	

Note 1) ∗ Indicates the pad type.
Note 2) □ Indicates the pad material.

Dimensions: With Adapter

ZPT 40/50 H□-A14 (Male thread)

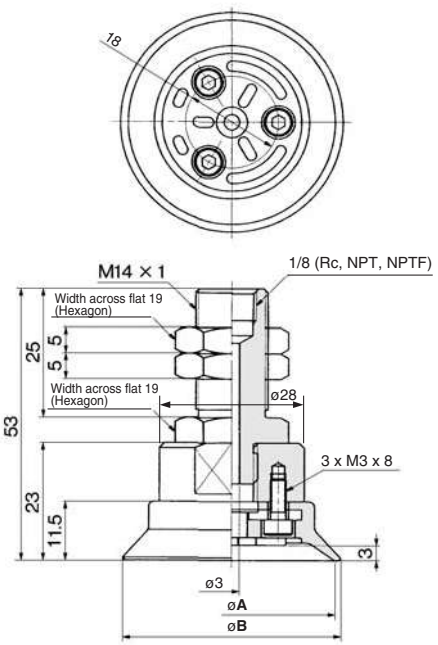

Dimensions

Model	A	B
ZPT40H□-A14	40	42
ZPT50H□-A14	50	52

ZPT 63/80 H□-A16 (Male thread)

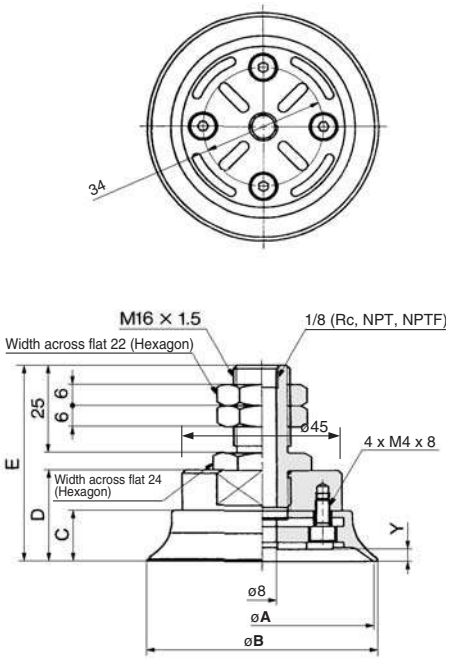

Dimensions

Model	A	B	C	D	E	Y
ZPT63H□-A16	63	65	14.5	26	56	3.5
ZPT80H□-A16	80	82	16.5	28	58	4.5

ZPT 100/125 H□-A16 (Male thread)

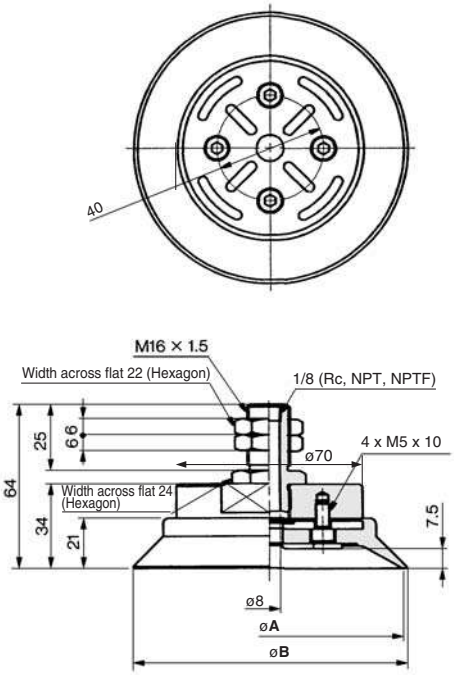

Dimensions

Model	A	B
ZPT100H□-A16	100	103
ZPT125H□-A16	125	128

Dimensions: With Adapter

ZPT$^{40}_{50}$HB□-A14 (Male thread)

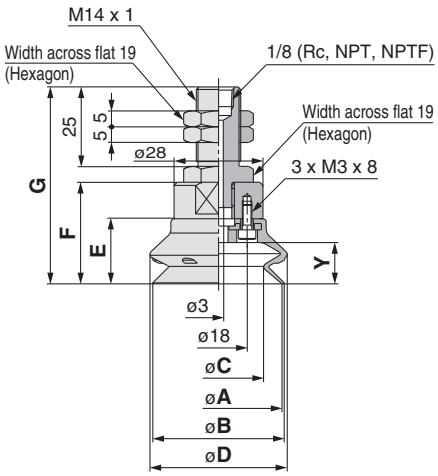

ZPT$^{63}_{80}$HB□-A16 (Male thread)

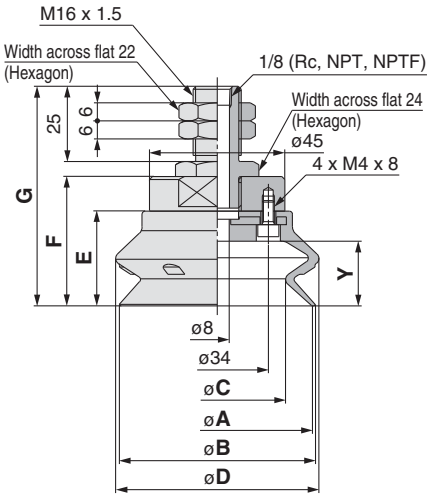

ZPT$^{100}_{125}$HB□-A16 (Male thread)

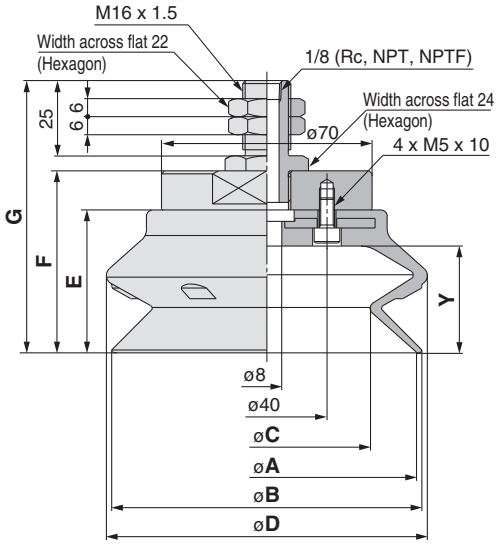

Dimensions

Model	A	B	C	D
ZPT40HB□-A14	40	41	28	43
ZPT50HB□-A14	50	52	36	54

Model	E	F	G	Y
ZPT40HB□-A14	20.5	32	62	13
ZPT50HB□-A14	24	35.5	65.5	16.5

Dimensions

Model	A	B	C	D
ZPT63HB□-A16	63	65	46	68
ZPT80HB□-A16	80	83	58	85

Model	E	F	G	Y
ZPT63HB□-A16	31.5	43	73	21.5
ZPT80HB□-A16	37	48.5	78.5	27.5

Dimensions

Model	A	B	C	D
ZPT100HB□-A16	100	103	69	107
ZPT125HB□-A16	125	129	89	135

Model	E	F	G	Y
ZPT100HB□-A16	47.5	60.5	90.5	35.5
ZPT125HB□-A16	56	69	99	44

ZPT$^{40}_{50}$H□-B (Female thread)

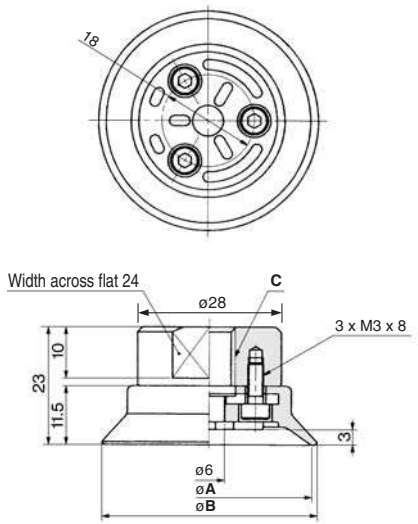

ZPT$^{63}_{80}$H□-B (Female thread)

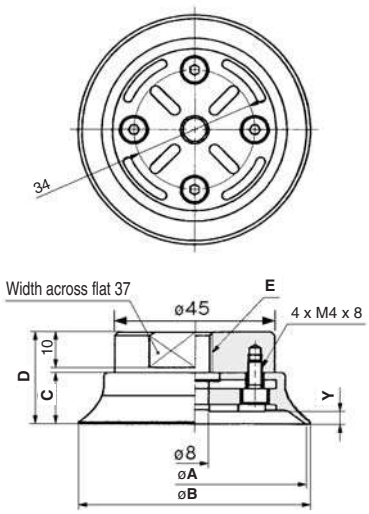

Dimensions

Model	A	B	C
ZPT40H□-B8	40	42	M8 x 1.25
ZPT40H□-B10	40	42	M10 x 1.5
ZPT50H□-B8	50	52	M8 x 1.25
ZPT50H□-B10	50	52	M10 x 1.5

Dimensions

Model	A	B	C	D	E	Y
ZPT63H□-B8	63	65	14.5	26	M8 x 1.25	3.5
ZPT63H□-B10	63	65	14.5	26	M10 x 1.5	3.5
ZPT63H□-B12	63	65	14.5	26	M12 x 1.75	3.5
ZPT63H□-B16	63	65	14.5	26	M16 x 1.5	3.5
ZPT80H□-B8	80	82	16.5	28	M8 x 1.25	4.5
ZPT80H□-B10	80	82	16.5	28	M10 x 1.5	4.5
ZPT80H□-B12	80	82	16.5	28	M12 x 1.75	4.5
ZPT80H□-B16	80	82	16.5	28	M16 x 1.5	4.5

Dimensions: With Adapter

ZPT$^{100}_{125}$H□-B (Female thread)

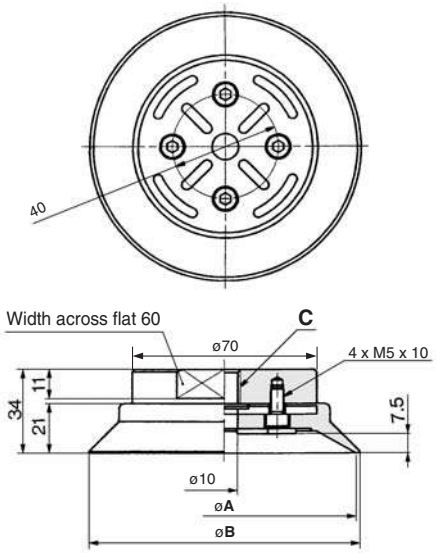

Dimensions

Model	A	B	C
ZPT100H□-B12	100	103	M12 x 1.75
ZPT100H□-B16	100	103	M16 x 1.5
ZPT125H□-B12	125	128	M12 x 1.75
ZPT125H□-B16	125	128	M16 x 1.5

ZPT$^{40}_{50}$H□-B (Female thread)

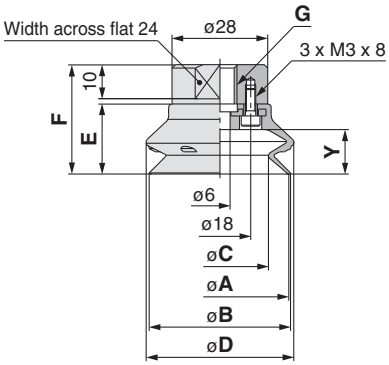

Dimensions

Model	A	B	C	D	E	F	G	Y
ZPT40HB□-B8	40	41	28	43	20.5	32	M8 x 1.25	13
ZPT40HB□-B10							M10 x 1.5	
ZPT50HB□-B8	50	52	36	54	24	35.5	M8 x 1.25	16.5
ZPT50HB□-B10							M10 x 1.5	

ZPT$^{63}_{80}$HB□-B (Female thread)

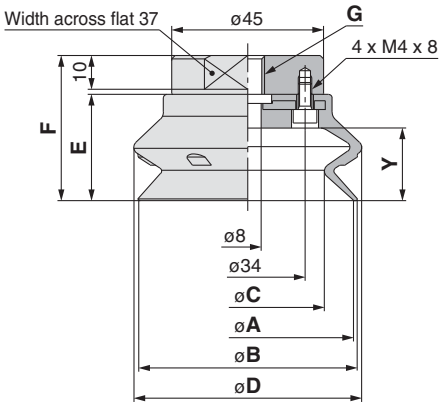

Dimensions

Model	A	B	C	D	E	F	G	Y
ZPT63HB□-B8	63	65	46	68	31.5	43	M8 x 1.25	21.5
ZPT63HB□-B10							M10 x 1.5	
ZPT63HB□-B12							M12 x 1.75	
ZPT63HB□-B16							M16 x 1.5	
ZPT80HB□-B8	80	83	58	85	37	48.5	M8 x 1.25	27.5
ZPT80HB□-B10							M10 x 1.5	
ZPT80HB□-B12							M12 x 1.75	
ZPT80HB□-B16							M16 x 1.5	

ZPT$^{100}_{125}$HB□-B (Female thread)

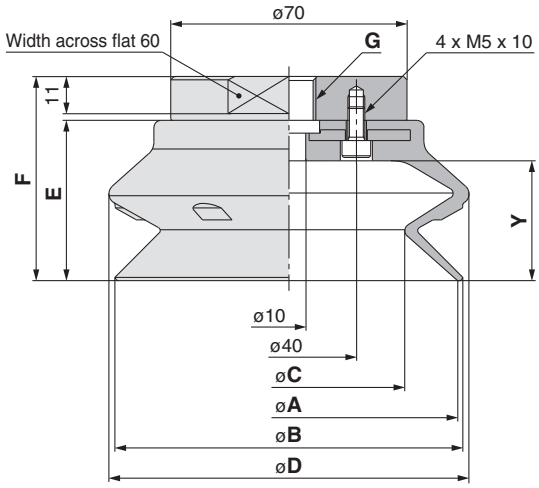

Dimensions

Model	A	B	C	D	E	F	G	Y
ZPT100HB□-B12	100	103	69	107	47.5	60.5	M12 x 1.75	35.5
ZPT100HB□-B16							M16 x 1.5	
ZPT125HB□-B12	125	129	89	135	56	69	M12 x 1.75	44
ZPT125HB□-B16							M16 x 1.5	

How to Order

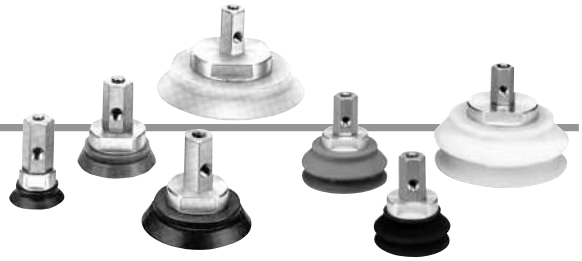

Without buffer **ZPX 40 H N − B01 − B8**

Pad diameter

Symbol	Pad diameter
40	ø40
50	ø50
63	ø63
80	ø80
100	ø100
125	ø125

Pad type (∗)

Symbol	Type
H	Heavy-duty (Flat with rib)
HB	Heavy-duty (Bellows)

Vacuum inlet thread size

Symbol	Thread size
B01	Rc1/8
N01	NPT1/8
T01	NPTF1/8

Vacuum inlet direction **Lateral**

Mounting thread size

Symbol	Thread size	Pad diameter ø40, ø50	ø63, ø80	ø100, ø125
B8	M8 x 1.25	●	—	—
B10	M10 x 1.5	●	●	●
B12	M12 x 1.75	—	●	●

Pad material (□)

Symbol	Material
N	NBR
S	Silicone rubber
U	Urethane rubber
F	FKM
E	EPR

Replacement Part No.

Model	Pad unit part no.	Adapter assembly part no.	
ZPX40∗□-B01-B8	ZP40∗□	ZPA-X1-B01-B8	With three M3 bolts
ZPX40∗□-N01-B8		ZPA-X1-N01-B8	
ZPX40∗□-T01-B8		ZPA-X1-T01-B8	
ZPX40∗□-B01-B10		ZPA-X1-B01-B10	
ZPX40∗□-N01-B10		ZPA-X1-N01-B10	
ZPX40∗□-T01-B10		ZPA-X1-T01-B10	
ZPX50∗□-B01-B8	ZP50∗□	ZPA-X1-B01-B8	With three M3 bolts
ZPX50∗□-N01-B8		ZPA-X1-N01-B8	
ZPX50∗□-T01-B8		ZPA-X1-T01-B8	
ZPX50∗□-B01-B10		ZPA-X1-B01-B10	
ZPX50∗□-N01-B10		ZPA-X1-N01-B10	
ZPX50∗□-T01-B10		ZPA-X1-T01-B10	
ZPX63∗□-B01-B10	ZP63∗□	ZPA-X2-B01-B10	With four M4 bolts
ZPX63∗□-N01-B10		ZPA-X2-N01-B10	
ZPX63∗□-T01-B10		ZPA-X2-T01-B10	
ZPX63∗□-B01-B12		ZPA-X2-B01-B12	
ZPX63∗□-N01-B12		ZPA-X2-N01-B12	
ZPX63∗□-T01-B12		ZPA-X2-T01-B12	

Model	Pad unit part no.	Adapter assembly part no.	
ZPX80∗□-B01-B10	ZP80∗□	ZPA-X2-B01-B10	With four M4 bolts
ZPX80∗□-N01-B10		ZPA-X2-N01-B10	
ZPX80∗□-T01-B10		ZPA-X2-T01-B10	
ZPX80∗□-B01-B12		ZPA-X2-B01-B12	
ZPX80∗□-N01-B12		ZPA-X2-N01-B12	
ZPX80∗□-T01-B12		ZPA-X2-T01-B12	
ZPX100∗□-B01-B10	ZP100∗□	ZPA-X3-B01-B10	With four M5 bolts
ZPX100∗□-N01-B10		ZPA-X3-N01-B10	
ZPX100∗□-T01-B10		ZPA-X3-T01-B10	
ZPX100∗□-B01-B12		ZPA-X3-B01-B12	
ZPX100∗□-N01-B12		ZPA-X3-N01-B12	
ZPX100∗□-T01-B12		ZPA-X3-T01-B12	
ZPX125∗□-B01-B10	ZP125∗□	ZPA-X3-B01-B10	With four M5 bolts
ZPX125∗□-N01-B10		ZPA-X3-N01-B10	
ZPX125∗□-T01-B10		ZPA-X3-T01-B10	
ZPX125∗□-B01-B12		ZPA-X3-B01-B12	
ZPX125∗□-N01-B12		ZPA-X3-N01-B12	
ZPX125∗□-T01-B12		ZPA-X3-T01-B12	

Note 1) ∗ Indicates the pad type.
Note 2) □ Indicates the pad material.

Dimensions: Without Buffer

ZPX$^{40}_{50}$H□-01-$^{B8}_{B10}$

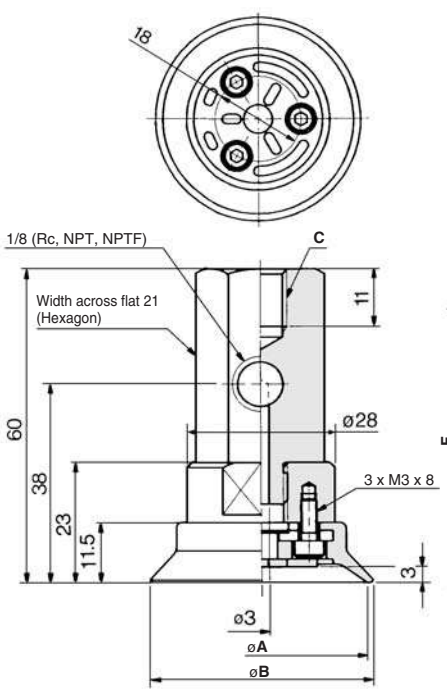

ZPX$^{63}_{80}$H□-01-$^{B10}_{B12}$

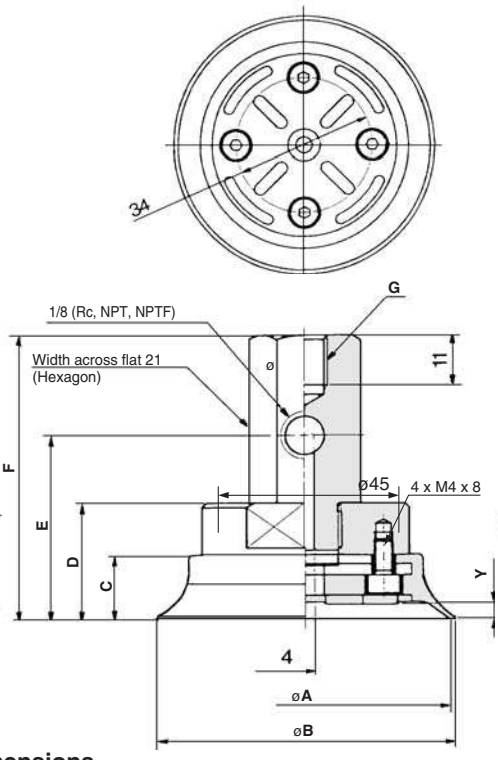

ZPX$^{100}_{125}$H□-01-$^{B10}_{B12}$

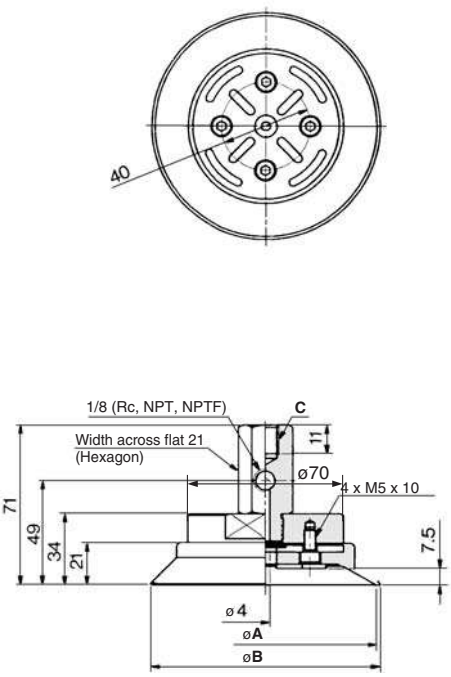

Dimensions

Model	A	B	C
ZPX40H□-01-B8	40	42	M8 x 1.25
ZPX40H□-01-B10	40	42	M10 x 1.5
ZPX50H□-01-B8	50	52	M8 x 1.25
ZPX50H□-01-B10	50	52	M10 x 1.5

Dimensions

Model	A	B	C	D	E	F	Y	G
ZPX63H□-01-B10	63	65	14.5	26	41	63	3.5	M10 x 1.5
ZPX63H□-01-B12	63	65	14.5	26	41	63	3.5	M12 x 1.75
ZPX80H□-01-B10	80	82	16.5	28	43	65	4.5	M10 x 1.5
ZPX80H□-01-B12	80	82	16.5	28	43	65	4.5	M12 x 1.75

Dimensions

Model	A	B	C
ZPX100H□-01-B10	100	103	M10 x 1.5
ZPX100H□-01-B12	100	103	M12 x 1.75
ZPX125H□-01-B10	125	128	M10 x 1.5
ZPX125H□-01-B12	125	128	M12 x 1.75

Dimensions: Without Buffer

ZPX$^{40}_{50}$HB□-01-$^{B8}_{B10}$

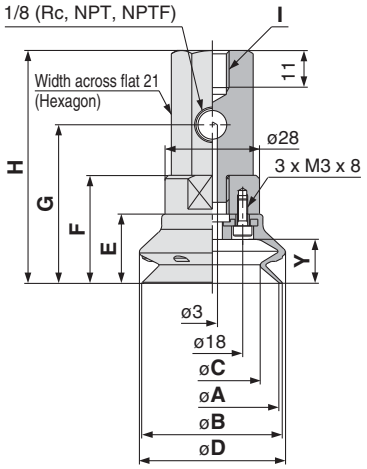

ZPX$^{63}_{80}$HB□-01-$^{B10}_{B12}$

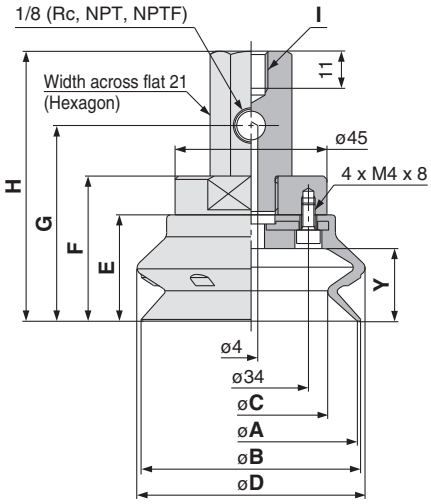

ZPX$^{100}_{125}$HB□-01-$^{B10}_{B12}$

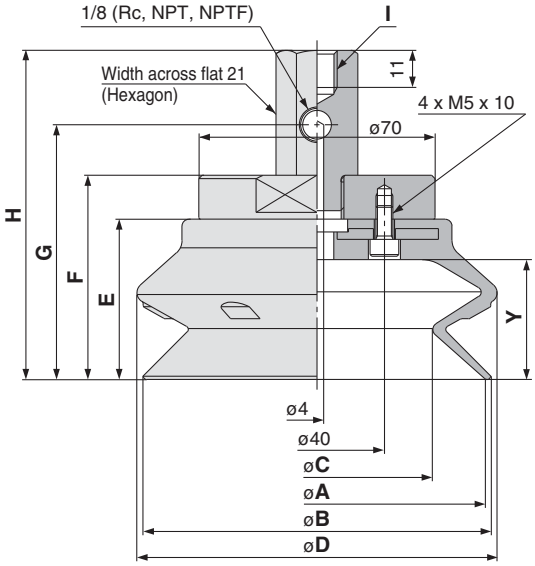

Dimensions

Model	A	B	C	D	E	F
ZPX40HB□-01-B8	40	41	28	43	20.5	32
ZPX40HB□-01-B10						
ZPX50HB□-01-B8	50	52	36	54	24	35.5
ZPX50HB□-01-B10						

Model	G	H	I	Y
ZPX40HB□-01-B8	47	69	M8 x 1.25	13
ZPX40HB□-01-B10			M10 x 1.5	
ZPX50HB□-01-B8	50.5	72.5	M8 x 1.25	16.5
ZPX50HB□-01-B10			M10 x 1.5	

Dimensions

Model	A	B	C	D	E	F
ZPX63HB□-01-B10	63	65	46	68	31.5	43
ZPX63HB□-01-B12						
ZPX80HB□-01-B10	80	83	58	85	37	48.5
ZPX80HB□-01-B12						

Model	G	H	I	Y
ZPX63HB□-01-B10	58	80	M10 x 1.5	21.5
ZPX63HB□-01-B12			M12 x 1.75	
ZPX80HB□-01-B10	63.5	85.5	M10 x 1.5	27.5
ZPX80HB□-01-B12			M12 x 1.75	

Dimensions

Model	A	B	C	D	E	F
ZPX100HB□-01-B10	100	103	69	107	47.5	60.5
ZPX100HB□-01-B12						
ZPX125HB□-01-B10	125	129	89	135	56	69
ZPX125HB□-01-B12						

Model	G	H	I	Y
ZPX100HB□-01-B10	75.5	97.5	M10 x 1.5	35.5
ZPX100HB□-01-B12			M12 x 1.75	
ZPX125HB□-01-B10	84	106	M10 x 1.5	44
ZPX125HB□-01-B12			M12 x 1.75	

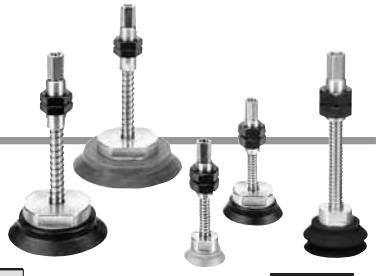

How to Order

With buffer ZPT 40 H N J 25 − B01 − A18

Pad diameter

Symbol	Pad diameter
40	ø40
50	ø50
63	ø63
80	ø80
100	ø100
125	ø125

Pad type (∗)

Symbol	Type
H	Heavy-duty (Flat with rib)
HB	Heavy-duty (Bellows)

Pad material (□)

Symbol	Material
N	NBR
S	Silicone rubber
U	Urethane rubber
F	FKM
E	EPR

Buffer body material (★)

Symbol	Material
J	Aluminum alloy
JB	Brass + With bushing
JF	Steel + With bushing

Buffer stroke (■)

Stroke	ø40	ø50	ø63	ø80	ø100	ø125
25	●	●	●	●	●	●
50	●	●	●	●	●	●
75	●	●	●	●	●	●
100	—	—	—	—	●	●

Vacuum inlet thread size

Symbol	Thread size
B01	Rc1/8
N01	NPT1/8
T01	NPTF1/8

Mounting thread size

Symbol	Thread size
A18	M18 x 1.5 (ø40 to ø80)
A22	M22 x 1.5 (ø100, ø125)

Vacuum inlet direction Vertical

Tightening Torque

(N·m)

Mounting thread size \ Buffer body material	Aluminum alloy	Brass + With bushing	Steel + With bushing
M18 x 1.5	10	30	50
M22 x 1.5	10	45	75

∗ Control value of the tightening torque shall be ±5%.

Replacement Part No.

Model	Pad unit part no.	Buffer assembly part no.	
ZPT40∗□★25-(B/N/T)01-A18	ZP40∗□	ZPB-T1★25-(B/N/T)01	With three M3 bolts
ZPT40∗□★50-(B/N/T)01-A18		ZPB-T1★50-(B/N/T)01	
ZPT40∗□★75-(B/N/T)01-A18		ZPB-T1★75-(B/N/T)01	
ZPT50∗□★25-(B/N/T)01-A18	ZP50∗□	ZPB-T1★25-(B/N/T)01	
ZPT50∗□★50-(B/N/T)01-A18		ZPB-T1★50-(B/N/T)01	
ZPT50∗□★75-(B/N/T)01-A18		ZPB-T1★75-(B/N/T)01	
ZPT63∗□★25-(B/N/T)01-A18	ZP63∗□	ZPB-T2★25-(B/N/T)01	With four M4 bolts
ZPT63∗□★50-(B/N/T)01-A18		ZPB-T2★50-(B/N/T)01	
ZPT63∗□★75-(B/N/T)01-A18		ZPB-T2★75-(B/N/T)01	
ZPT80∗□★25-(B/N/T)01-A18	ZP80∗□	ZPB-T2★25-(B/N/T)01	
ZPT80∗□★50-(B/N/T)01-A18		ZPB-T2★50-(B/N/T)01	
ZPT80∗□★75-(B/N/T)01-A18		ZPB-T2★75-(B/N/T)01	
ZPT100∗□★25-(B/N/T)01-A22	ZP100∗□	ZPB-T3★25-(B/N/T)01	With four M5 bolts
ZPT100∗□★50-(B/N/T)01-A22		ZPB-T3★50-(B/N/T)01	
ZPT100∗□★75-(B/N/T)01-A22		ZPB-T3★75-(B/N/T)01	
ZPT100∗□★100-(B/N/T)01-A22		ZPB-T3★100-(B/N/T)01	
ZPT125∗□★25-(B/N/T)01-A22	ZP125∗□	ZPB-T3★25-(B/N/T)01	
ZPT125∗□★50-(B/N/T)01-A22		ZPB-T3★50-(B/N/T)01	
ZPT125∗□★75-(B/N/T)01-A22		ZPB-T3★75-(B/N/T)01	
ZPT125∗□★100-(B/N/T)01-A22		ZPB-T3★100-(B/N/T)01	

Note 1) ∗ Indicates the pad type.
Note 2) □ Indicates the pad material.
Note 3) ★ Indicates the buffer body material.

Buffer Specifications (Rotating)

Pad diameter		ø40 to ø80	ø100, ø125
Stroke (mm)		25, 50, 75	25, 50, 75, 100
Spring reactive force	At 0 stroke (N)	6.9	10
	At buffer stroke (N)	11.8	15

Dimensions: With Buffer

ZPT$^{40}_{50}$H□★■-01-A18

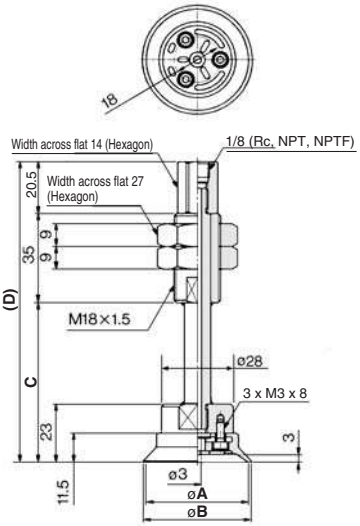

Dimensions

Model	A	B	C	D
ZPT40H□★25-01-A18	40	42	63	118.5
ZPT40H□★50-01-A18	40	42	98	153.5
ZPT40H□★75-01-A18	40	42	134	189.5
ZPT50H□★25-01-A18	50	52	63	118.5
ZPT50H□★50-01-A18	50	52	98	153.5
ZPT50H□★75-01-A18	50	52	134	189.5

ZPT$^{63}_{80}$H□★■-01-A18

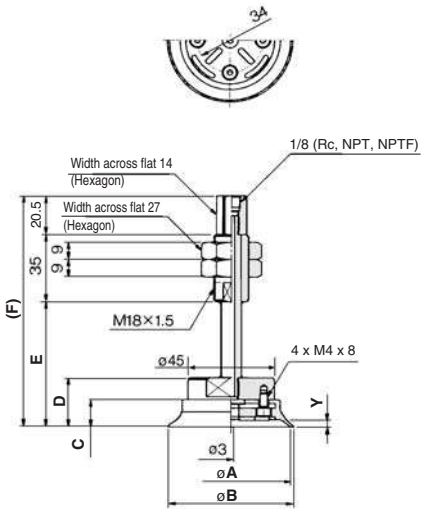

Dim

Model	A	B	C	D	E	F	Y
ZPT63H□★25-01-A18	63	65	14.5	26	66	121.5	3.5
ZPT63H□★50-01-A18	63	65	14.5	26	101	156.5	3.5
ZPT63H□★75-01-A18	63	65	14.5	26	137	192.5	3.5
ZPT80H□★25-01-A18	80	83	16.5	28	68	123.5	4.5
ZPT80H□★50-01-A18	80	83	16.5	28	103	158.5	4.5
ZPT80H□★75-01-A18	80	83	16.5	28	139	194.5	4.5

ZPT$^{100}_{125}$H□★■-01-A22

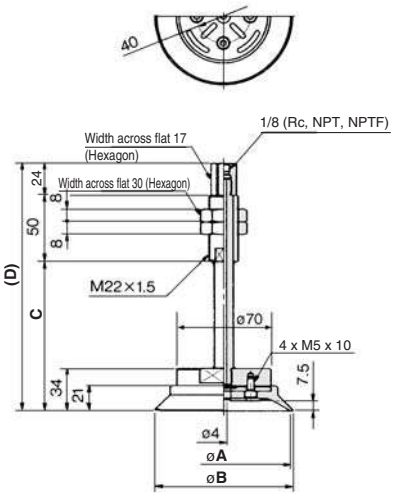

Model	A	B	C	D
ZPT100H□★25-01-A22	100	103	78	152
ZPT100H□★50-01-A22	100	103	114	188
ZPT100H□★75-01-A22	100	103	154	228
ZPT100H□★100-01-A22	100	103	189	263
ZPT125H□★25-01-A22	125	128	78	152
ZPT125H□★50-01-A22	125	128	114	188
ZPT125H□★75-01-A22	125	128	154	228
ZPT125H□★100-01-A22	125	128	189	263

Dimensions: With Buffer

ZPT$^{40}_{50}$HB□★■-01-A18

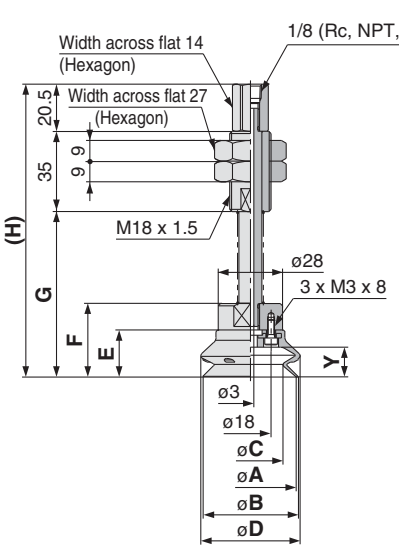

ZPT$^{63}_{80}$HB□★■-01-A18

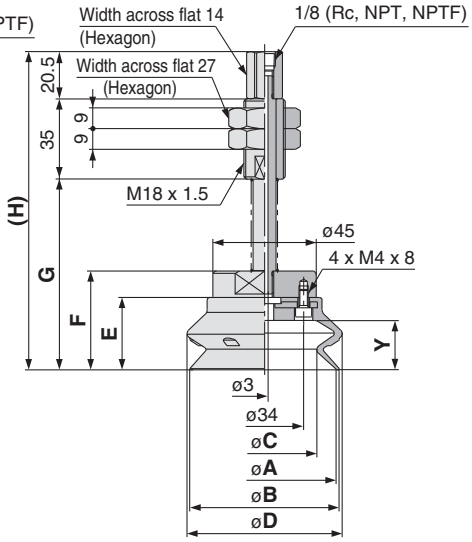

ZPT$^{100}_{125}$HB□★■-01-A22

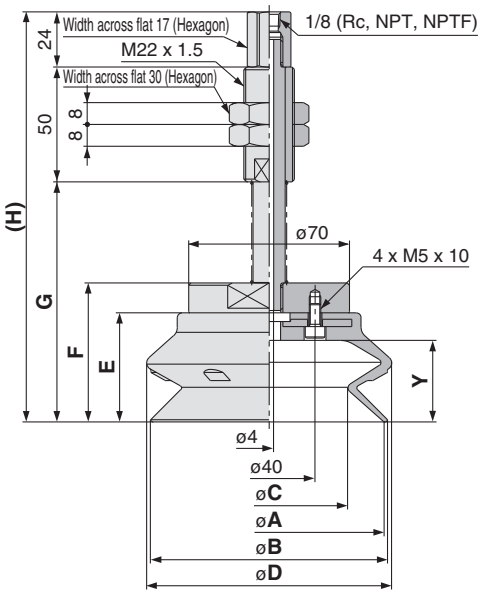

Dimensions

Model	A	B	C	D	E
ZPT40HB□★25-01-A18	40	41	28	43	20.5
ZPT40HB□★50-01-A18					
ZPT40HB□★75-01-A18					
ZPT50HB□★25-01-A18	50	52	36	54	24
ZPT50HB□★50-01-A18					
ZPT50HB□★75-01-A18					

Model	F	G	H	Y
ZPT40HB□★25-01-A18	32	72	127.5	13
ZPT40HB□★50-01-A18		107	162.5	
ZPT40HB□★75-01-A18		143	198.5	
ZPT50HB□★25-01-A18	35.5	75.5	131	16.5
ZPT50HB□★50-01-A18		110.5	166	
ZPT50HB□★75-01-A18		146.5	202	

Dimensions

Model	A	B	C	D	E
ZPT63HB□★25-01-A18	63	65	46	68	31.5
ZPT63HB□★50-01-A18					
ZPT63HB□★75-01-A18					
ZPT80HB□★25-01-A18	80	83	58	85	37
ZPT80HB□★50-01-A18					
ZPT80HB□★75-01-A18					

Model	F	G	H	Y
ZPT63HB□★25-01-A18	43	83	138.5	21.5
ZPT63HB□★50-01-A18		118	173.5	
ZPT63HB□★75-01-A18		154	209.5	
ZPT80HB□★25-01-A18	48.5	88.5	144	27.5
ZPT80HB□★50-01-A18		123.5	179	
ZPT80HB□★75-01-A18		159.5	215	

Dimensions

Model	A	B	C	D	E
ZPT100HB□★25-01-A22	100	103	69	107	47.5
ZPT100HB□★50-01-A22					
ZPT100HB□★75-01-A22					
ZPT100HB□★100-01-A22					
ZPT125HB□★25-01-A22	125	129	89	135	56
ZPT125HB□★50-01-A22					
ZPT125HB□★75-01-A22					
ZPT125HB□★100-01-A22					

Model	F	G	H	Y
ZPT100HB□★25-01-A22	60.5	104.5	178.5	35.5
ZPT100HB□★50-01-A22		140.5	214.5	
ZPT100HB□★75-01-A22		180.5	254.5	
ZPT100HB□★100-01-A22		215.5	289.5	
ZPT125HB□★25-01-A22	69	113	187	44
ZPT125HB□★50-01-A22		149	223	
ZPT125HB□★75-01-A22		189	263	
ZPT125HB□★100-01-A22		224	298	

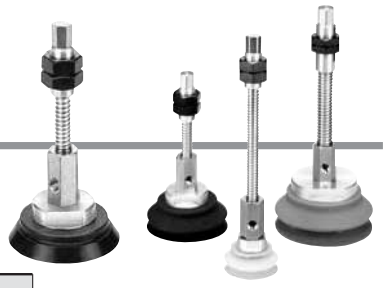

How to Order

With buffer ZPX 40 H N J 25 − B01 − A18

Pad diameter

Symbol	Pad diameter
40	ø40
50	ø50
63	ø63
80	ø80
100	ø100
125	ø125

Pad type (∗)

Symbol	Type
H	Heavy-duty (Flat with rib)
HB	Heavy-duty (Bellows)

Pad material (□)

Symbol	Material
N	NBR
S	Silicone rubber
U	Urethane rubber
F	FKM
E	EPR

Buffer body material (★)

Symbol	Material
J	Aluminum alloy
JB	Brass + With bushing
JF	Steel + With bushing

Buffer stroke (■)

Stroke	ø40	ø50	ø63	ø80	ø100	ø125
25	●	●	●	●	●	●
50	●	●	●	●	●	●
75	●	●	●	●	●	●
100	—	—	—	—	●	●

Vacuum inlet thread size

Symbol	Thread size
B01	Rc1/8
N01	NPT1/8
T01	NPTF1/8

Mounting thread size

Symbol	Thread size
A18	M18 x 1.5 (ø40 to ø80)
A22	M22 x 1.5 (ø100, ø125)

Vacuum inlet direction Lateral

Tightening Torque (N·m)

Mounting thread size \ Buffer body material	Aluminum alloy	Brass + With bushing	Steel + With bushing
M18 x 1.5	10	30	50
M22 x 1.5	10	45	75

∗ Control value of the tightening torque shall be 5%.

Replacement Part No.

Model	Pad unit part no.	Buffer assembly part no.	
ZPX40∗□★25-(B/N/T)01-A18	ZP40∗□	ZPB-X1★25-(B/N/T)01	With three M3 bolts
ZPX40∗□★50-(B/N/T)01-A18		ZPB-X1★50-(B/N/T)01	
ZPX40∗□★75-(B/N/T)01-A18		ZPB-X1★75-(B/N/T)01	
ZPX50∗□★25-(B/N/T)01-A18	ZP50∗□	ZPB-X1★25-(B/N/T)01	
ZPX50∗□★50-(B/N/T)01-A18		ZPB-X1★50-(B/N/T)01	
ZPX50∗□★75-(B/N/T)01-A18		ZPB-X1★75-(B/N/T)01	
ZPX63∗□★25-(B/N/T)01-A18	ZP63∗□	ZPB-X2★25-(B/N/T)01	With four M4 bolts
ZPX63∗□★50-(B/N/T)01-A18		ZPB-X2★50-(B/N/T)01	
ZPX63∗□★75-(B/N/T)01-A18		ZPB-X2★75-(B/N/T)01	
ZPX80∗□★25-(B/N/T)01-A18	ZP80∗□	ZPB-X2★25-(B/N/T)01	
ZPX80∗□★50-(B/N/T)01-A18		ZPB-X2★50-(B/N/T)01	
ZPX80∗□★75-(B/N/T)01-A18		ZPB-X2★75-(B/N/T)01	
ZPX100∗□★25-(B/N/T)01-A22	ZP100∗□	ZPB-X3★25-(B/N/T)01	With four M5 bolts
ZPX100∗□★50-(B/N/T)01-A22		ZPB-X3★50-(B/N/T)01	
ZPX100∗□★75-(B/N/T)01-A22		ZPB-X3★75-(B/N/T)01	
ZPX100∗□★100-(B/N/T)01-A22		ZPB-X3★100-(B/N/T)01	
ZPX125∗□★25-(B/N/T)01-A22	ZP125∗□	ZPB-X3★25-(B/N/T)01	
ZPX125∗□★50-(B/N/T)01-A22		ZPB-X3★50-(B/N/T)01	
ZPX125∗□★75-(B/N/T)01-A22		ZPB-X3★75-(B/N/T)01	
ZPX125∗□★100-(B/N/T)01-A22		ZPB-X3★100-(B/N/T)01	

Note 1) ∗ Indicates the pad type.
Note 2) □ Indicates the pad material.
Note 3) ★ Indicates the buffer body material.

Buffer Specifications (Rotating)

Pad diameter		ø40 to ø80	ø100, ø125
Stroke (mm)		25, 50, 75	25, 50, 75, 100
Spring reactive force	At 0 stroke (N)	6.9	10
	At buffer stroke (N)	11.8	15

Dimensions: With Buffer

ZPX$^{40}_{50}$H□★■-01-A18

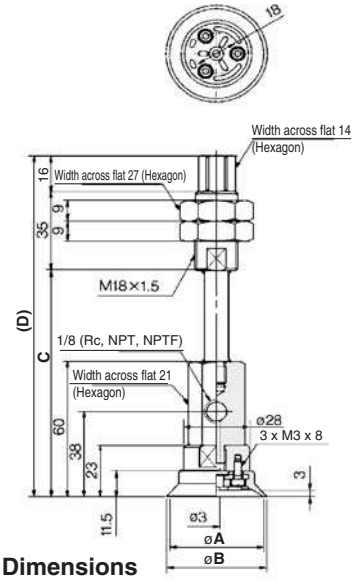

Dimensions

Model	A	B	C	D
ZPX40H□★25-01-A18	40	42	100	151
ZPX40H□★50-01-A18	40	42	135	186
ZPX40H□★75-01-A18	40	42	171	222
ZPX50H□★25-01-A18	50	52	100	151
ZPX50H□★50-01-A18	50	52	135	186
ZPX50H□★75-01-A18	50	52	171	222

ZPX$^{63}_{80}$H□★■-01-A18

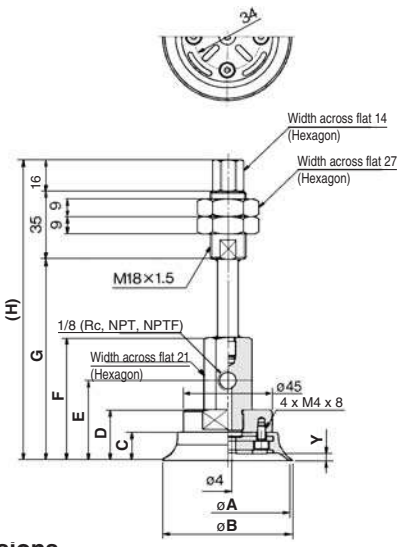

Dimensions

Model	A	B	C	D	E	F	G	H	Y
ZPX63H□★25-01-A18	63	65	14.5	26	41	63	103	154	3.5
ZPX63H□★50-01-A18	63	65	14.5	26	41	63	136	189	3.5
ZPX63H□★75-01-A18	63	65	14.5	26	41	63	172	225	3.5
ZPX80H□★25-01-A18	80	82	16.5	28	43	65	105	156	4.5
ZPX80H□★50-01-A18	80	82	16.5	28	43	65	138	191	4.5
ZPX80H□★75-01-A18	80	82	16.5	28	43	65	174	227	4.5

ZPX$^{100}_{125}$H□★■-01-A22

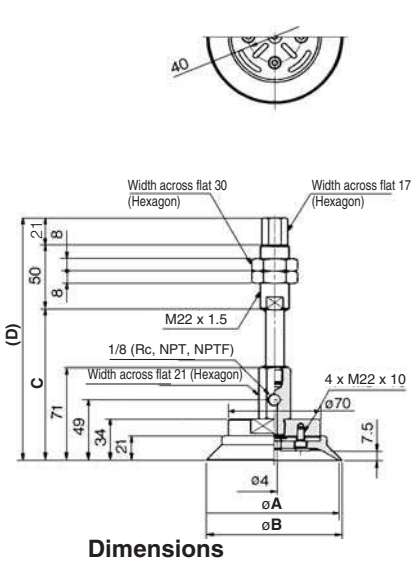

Dimensions

Model	A	B	C	D
ZPX100H□★25-01-A22	100	103	115	186
ZPX100H□★50-01-A22	100	103	151	222
ZPX100H□★75-01-A22	100	103	191	262
ZPX100H□★100-01-A22	100	103	226	297
ZPX125H□★25-01-A22	125	128	115	186
ZPX125H□★50-01-A22	125	128	151	222
ZPX125H□★75-01-A22	125	128	191	262
ZPX125H□★100-01-A22	125	128	226	297

Dimensions: With Buffer

ZPX$^{40}_{50}$HB□★■-01-A18

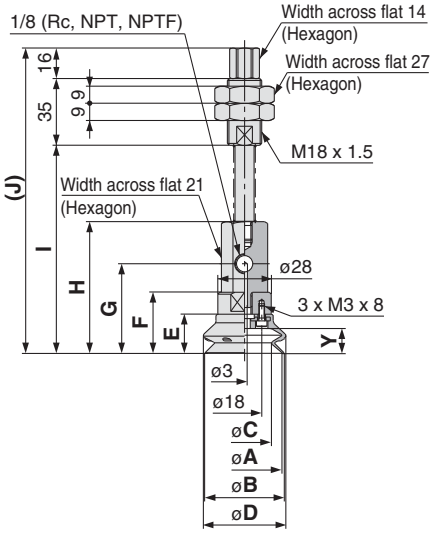

ZPX$^{63}_{80}$HB□★■-01-A18

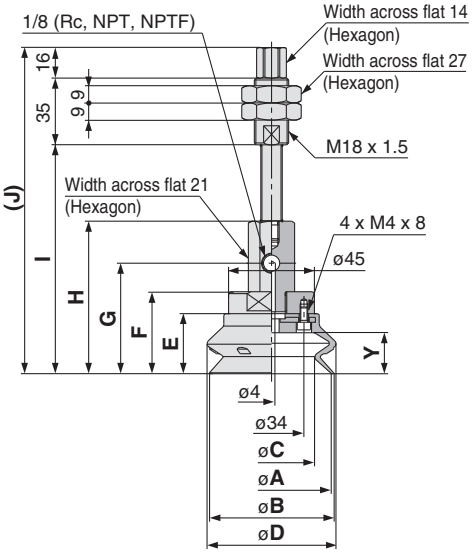

ZPX$^{100}_{125}$HB□★■-01-A22

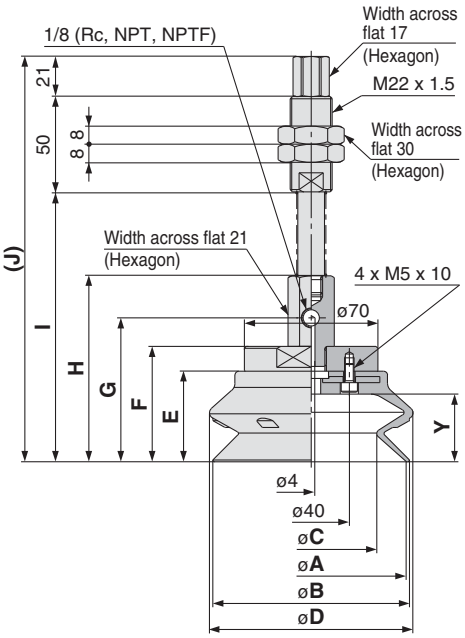

Dimensions

Model	A	B	C	D	E	F
ZPX40HB□★25-01-A18	40	41	28	43	20.5	32
ZPX40HB□★50-01-A18						
ZPX40HB□★75-01-A18						
ZPX50HB□★25-01-A18	50	52	36	54	24	35.5
ZPX50HB□★50-01-A18						
ZPX50HB□★75-01-A18						

Model	G	H	I	J	Y
ZPX40HB□★25-01-A18	47	69	109	160	13
ZPX40HB□★50-01-A18			144	195	
ZPX40HB□★75-01-A18			180	231	
ZPX50HB□★25-01-A18	50.5	72.5	112.5	163.5	16.5
ZPX50HB□★50-01-A18			147.5	198.5	
ZPX50HB□★75-01-A18			183.5	234.5	

Dimensions

Model	A	B	C	D	E	F
ZPX63HB□★25-01-A18	63	65	46	68	31.5	43
ZPX63HB□★50-01-A18						
ZPX63HB□★75-01-A18						
ZPX80HB□★25-01-A18	80	83	58	85	37	48.5
ZPX80HB□★50-01-A18						
ZPX80HB□★75-01-A18						

Model	G	H	I	J	Y
ZPX63HB□★25-01-A18	58	80	120	171	21.5
ZPX63HB□★50-01-A18			155	206	
ZPX63HB□★75-01-A18			191	242	
ZPX80HB□★25-01-A18	63.5	85.5	125.5	176.5	27.5
ZPX80HB□★50-01-A18			160.5	211.5	
ZPX80HB□★75-01-A18			196.5	247.5	

Dimensions

Model	A	B	C	D	E	F
ZPX100HB□★25-01-A22	100	103	69	107	47.5	60.5
ZPX100HB□★50-01-A22						
ZPX100HB□★75-01-A22						
ZPX100HB□★100-01-A22						
ZPX125HB□★25-01-A22	125	129	89	135	56	69
ZPX125HB□★50-01-A22						
ZPX125HB□★75-01-A22						
ZPX125HB□★100-01-A22						

Model	G	H	I	J	Y
ZPX100HB□★25-01-A22	75.5	97.5	141.5	212.5	35.5
ZPX100HB□★50-01-A22			177.5	248.5	
ZPX100HB□★75-01-A22			217.5	288.5	
ZPX100HB□★100-01-A22			252.5	323.5	
ZPX125HB□★25-01-A22	84	106	150	221	44
ZPX125HB□★50-01-A22			186	257	
ZPX125HB□★75-01-A22			226	297	
ZPX125HB□★100-01-A22			261	332	

Vacuum Pad for Transferring Disks

■For adsorbing and transferring disks of digital household electric appliances (CD, DVD)

- For adsorbing circular components like CD and DVD
- Bellows mechanism is realised in the pad to dampen the impact to the work.

How to Order

ZP2 – Z1 – 001 – S

Pad material

Symbol	Material
S	Silicone rubber
GS	Urethane rubber

Dimensions

ZP2-Z1-001-□□

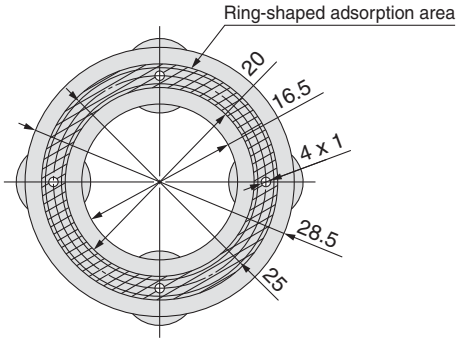

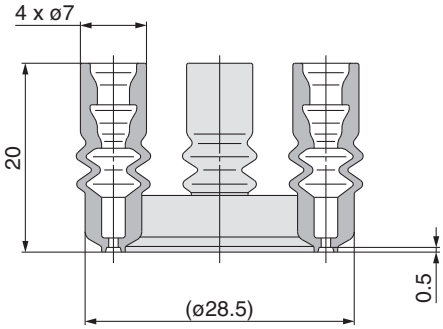

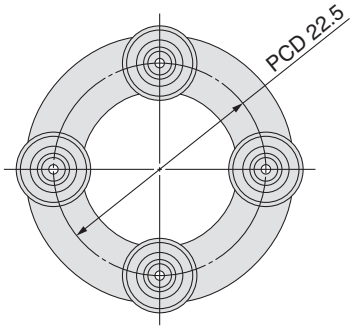

ZPT1-A5 is a recommended adapter.
(Four adapters are necessary.)
See below for mounting.
Refer to the Best Pneumatics No. 4 for details.

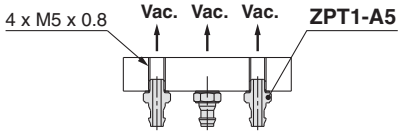

Example of attachment

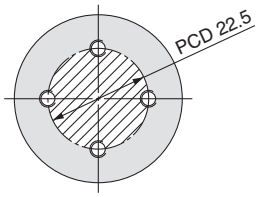

Vacuum Pad for Fixing Panel

■For adsorbing and fixing the stage of LCD panels, etc.
■Bellows mechanism allows complete contact with curved work surface.

Dimensions

ZP2-Z002

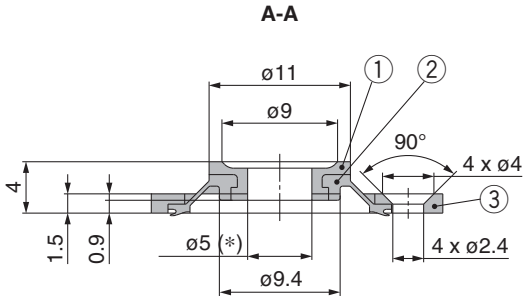

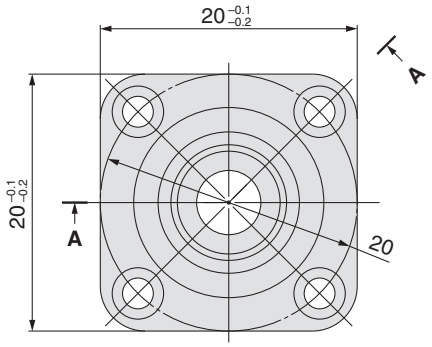

Component Parts

No.	Part no.	Description	Material	Note
1	ZP2-Z2A	Pad	PTFE	—
2	ZP2-Z2B	Joint	FKM	—
3	ZP2-Z2C	Mounting plate	Aluminum alloy	Clear anodized

ZP2-Z003

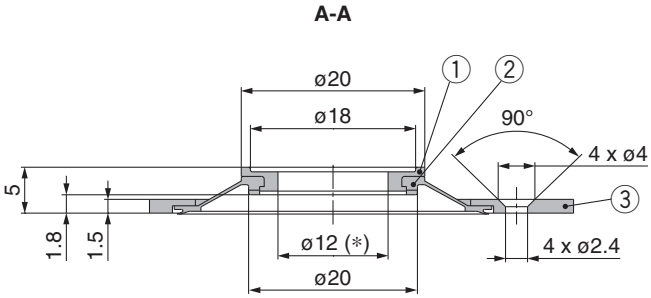

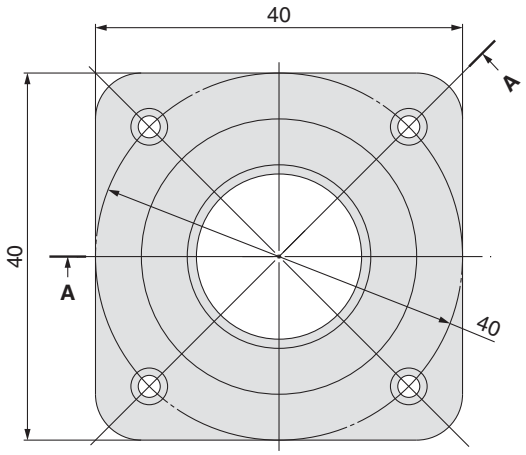

Component Parts

No.	Part no.	Description	Material	Note
1	ZP2-Z3A	Pad	PTFE	—
2	ZP2-Z3B	Joint	FKM	—
3	ZP2-Z3C	Mounting plate	Aluminum alloy	Clear anodized

How to use

The plate for air purging should be prepared by the customer.
The plate needs to have supporting points.
(Avoid applying the weight of the workpiece directly to the pad.)
Place the workpiece on the pad horizontally.

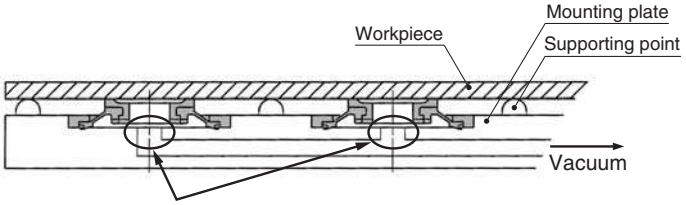

When a hole is made in the plate, the dimension shall be (*) or less.

Vacuum Saving Valve

■ Can restrict the reduction of vacuum pressure even when there is no workpiece.

When multiple vacuum pads are operated by one vacuum generator, and some of them are not holding the workpiece, the reduction of vacuum pressure is restricted and the workpiece can remain held by the rest of pads.

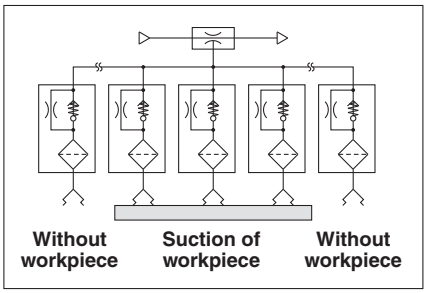

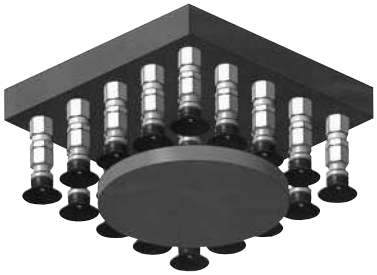

How to Order

ZP2V – A5 – 03

Connection thread symbol for pad side

Male thread connection

Symbol	Thread size	Applicable fixed orifice size 0.3	0.5	0.7	1.0
A5	M5	○	○	○	—
A8	M8	—	○	○	○
A01	R1/8	—	○	○	○
AG1	G1/8	—	○	○	○
AN1	NPT1/8	—	○	○	○

Female thread connection

Symbol	Thread size	Applicable fixed orifice size 0.3	0.5	0.7	1.0
B5	M5	○	○	○	—
B6	M6	○	○	○	—
B01	Rc1/8	—	○	○	○
BG1	G1/8	—	○	○	○
BN1	NPT1/8	—	○	○	○

Fixed orifice size

Symbol	Fixed orifice size (mm)
03	0.3
05	0.5
07	0.7
10	1.0

Specifications

Connection thread size for pad side	M5, M6			M8, R1/8, G1/8, NPT1/8		
Fixed orifice size (mm)	0.3	0.5	0.7	0.5	0.7	1.0
Fluid	Air					
Max. operating pressure range (MPa)	0 to 0.7					
Max. operating vacuum pressure range (kPa)	0 to –100					
Ambient and fluid temperature (°C)	5 to 60 (No freezing)					
Element nominal filtration rating (μm)	40					
Min. operating flow rate (ℓ/min (ANR))	3	5	8	5	8	16

■ No need for switching operation when changing workpieces

When the workpieces have different shapes, the control circuit can be simplified.

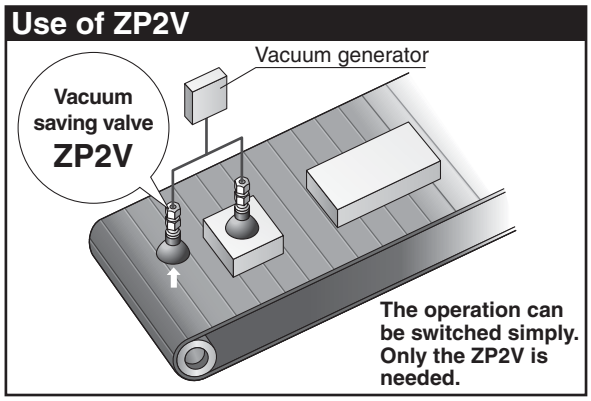

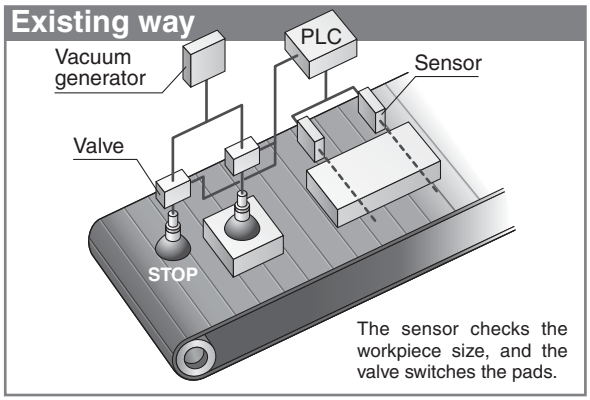

Model Selection

Select the quantity of vacuum saving valves that can be used with one vacuum generator.

Selection Conditions

Workpiece: No leakage and several sizes
Required vacuum pressure: –50 kPa or more of vacuum pressure per vacuum pad
Part number of vacuum saving valve used: ZP2V-A8-05
(Connection thread size for pad side: M8, Fixed orifice size: ø0.5)

1 Check the flow-rate characteristics of the vacuum generator used.

From the flow-rate characteristics of the vacuum generator **(Chart 1),** calculate **the suction flow rate (Q1) of the vacuum generator** from the required vacuum pressure.

Vacuum pressure –50 kPa (①→②→③) =
Suction flow rate (Q1) ≈ 31 ℓ/min (ANR).

2 Calculate the quantity (N) of vacuum saving valves.

Find **the minimum operating flow rate (Q2)** and **the suction flow rate (Q1) of the vacuum generator** from the specifications table (page 61), and calculate **the quantity (N) of vacuum saving valves** that can be used with one vacuum generator.

$$\text{Quantity of vacuum saving valves (N)} = \frac{\text{Suction flow rate of vacuum generator (Q1)}}{\text{Minimum operating flow rate (Q2)}}$$

Example) Vacuum saving valve used: **ZP2V-A8-05**
From **Table 1**, **Q2** can be calculated as **5.0 ℓ/min (ANR)**.

$$N = \frac{31\ \{\ell/\text{min (ANR)}\}}{5\ \{\ell/\text{min (ANR)}\}} \approx 6\ \text{(unit)}$$

Table 1. Relationship between Minimum Operating Flow Rate and Fixed Orifice Size

Connection thread size for pad side	**M8**
Fixed orifice size (mm)	0.5
Minimum operating flow rate (ℓ/min (ANR)) Q2	5.0

Chart 1. Flow-rate Characteristics of Vacuum Generator

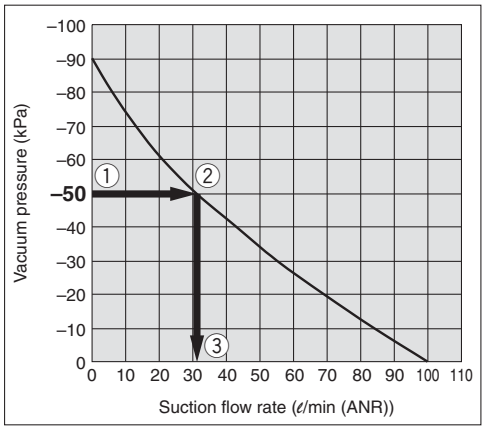

Chart 2. Selection Example by Min. Operating Flow Rate

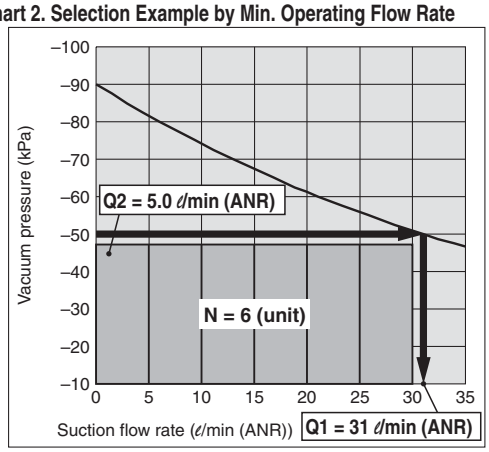

The above selection example is based on a general method under the given selection conditions, and may not always be applicable.
A final decision on operating conditions should be made based on test results performed at the responsibility of the customer.

⚠ Specific Product Precautions

Be sure to read before handling. Refer to back cover for Safety Instructions, "Handling Precautions for SMC Products" (M-E03-3) for Vacuum Equipment Precautions.

1. **The product is not equipped with a vacuum holding function, and cannot be used for the purpose of holding vacuum.**
2. **Determine the quantity of products to be used by selection, and keep the recommended pad diameter per product shown in Table 1. Also, check the operation with the customer's machine well in advance.**

Table 1. Recommended Pad Diameter per Product

Connection thread symbol for pad side	A5	B5	B6	A8	A01	B01	AG1	BG1	AN1	BN1
Thread size	M5		M6	M8	R1/8		G1/8		NPT1/8	
Recommended pad diameter (mm)	25 or less			32 to 50						

3. **Do not disassemble the product. Once the product is disassembled and reassembled, it will not be able to satisfy the original performance.**
4. **When piping, do not get the pad side and vacuum generator side of the product the wrong way round. (Refer to Fig. 1.)**

Enlarged view of name plate
(Vacuum generator side)

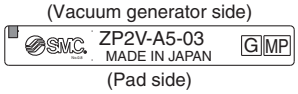

(Pad side)

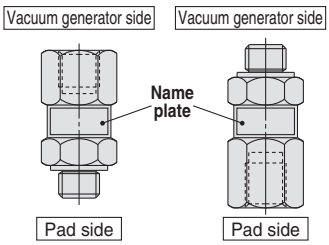

Fig. 1. Mounting direction

5. **For mounting and removing the product, strictly follow the instructions below.**
   When mounting and removing the product, use the specified places shown in page 64 to apply tools. Also, when mounting, tighten to the specified torque shown in page 64. Excessive torque or applying a tool to places other than the specified place can cause damage or loss of original performance.
6. **The reduction of the vacuum pressure while the workpiece is sucked and released depends on the flow-rate characteristics of the vacuum generator. Check the flow-rate characteristics of the vacuum generator before checking the operation with the customer's machine.**
7. **When the built-in element of the product gets clogged, replace the whole product.**
8. **When verifying the suction using such as a pressure sensor, check the operation with the customer's machine well in advance.**
9. **If there is leakage between the pad and a workpiece, for example if the workpiece is permeable, the quantity of products that can be used with one vacuum generator is reduced.**
   Take the leakage between the pad and workpiece into account and check the operation with the customer's machine before using.

Working Principle

	Initial condition	When a workpiece is sucked		When a workpiece is released
		Without workpiece	With workpiece	
Air flow	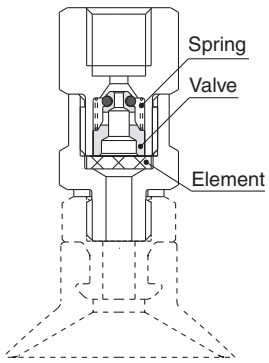	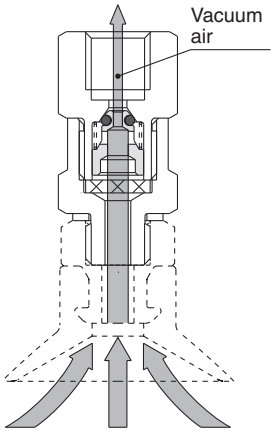	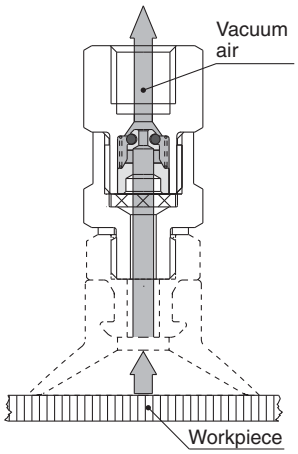	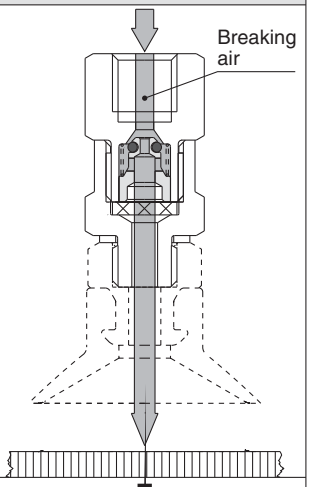
Valve operating condition	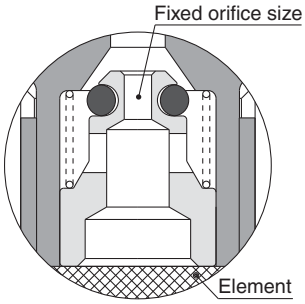 Since there is no air flow, the valve remains open by the spring force.	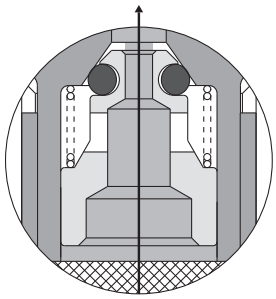 **Closed valve** When the workpiece is separated from the vacuum pad, the valve is closed by the air flow, and the suction air can only flow through the fixed orifice. At this time, an amount of air corresponding to the fixed orifice size is sucked.	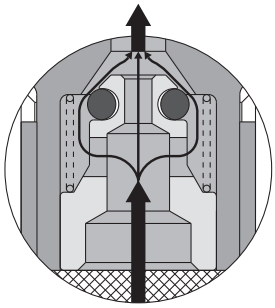 **Opened valve** When the workpiece is sucked by the vacuum pad, the suction flow reduces, and the valve is opened by the spring force, which opens the path between the valve and body for suction.	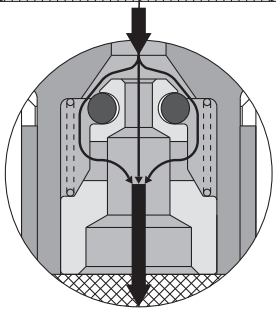 **Opened valve** When the workpiece is released, the valve is opened by the vacuum breaking air, and the path between the valve and body will open.

Construction

Vacuum generator side

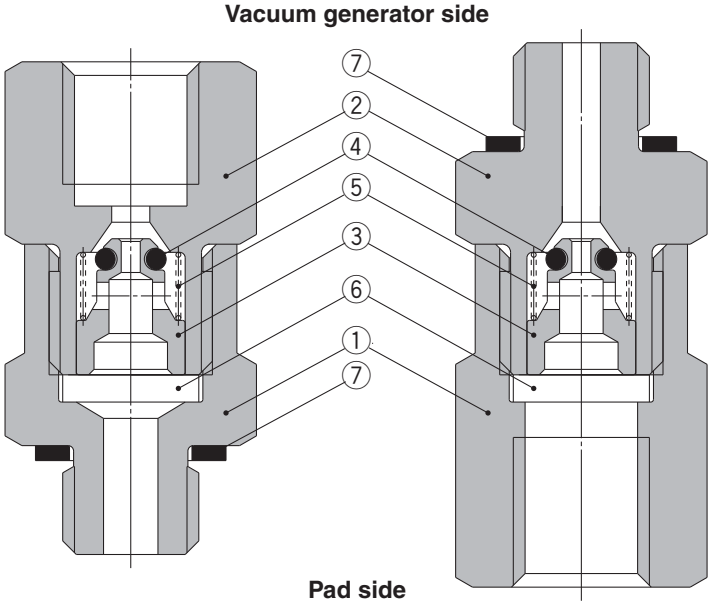

Pad side

ZP2V-A□-□ **ZP2V-B□-□**

Vacuum generator side

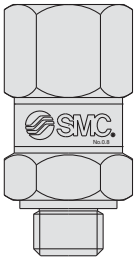

Pad side

∗ For the mounting direction of the product, refer to point **4** on page 62.

Component Parts

No.	Description	Material	Surface treatment
1	**Body A**	Brass	Electroless nickel plated
2	**Body B**	Brass	Electroless nickel plated
3	**Valve**	Aluminum	—
4	**O-ring**	HNBR	—
5	**Spring**	Stainless steel	—
6	**Element**	BC	—
7	**Gasket**	NBR + Stainless steel	—

Dimensions

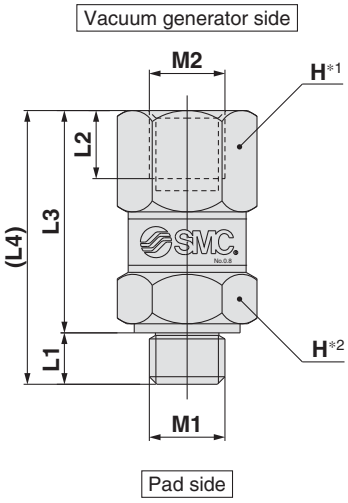

ZP2V-A5-□
ZP2V-A8-□

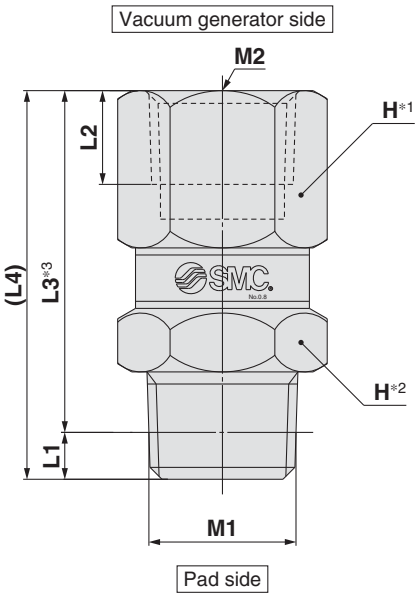

ZP2V-A01-□
ZP2V-AN1-□

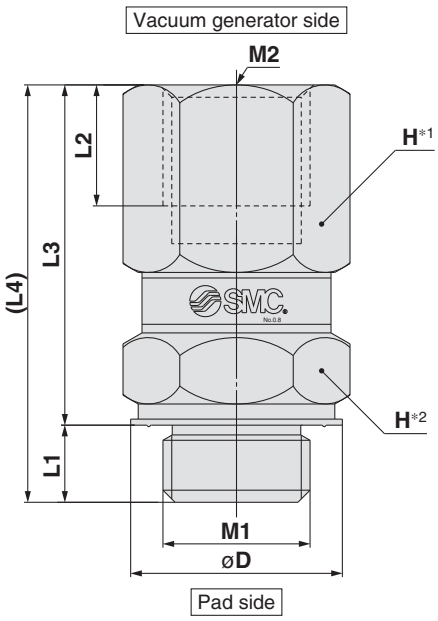

ZP2V-AG1-□

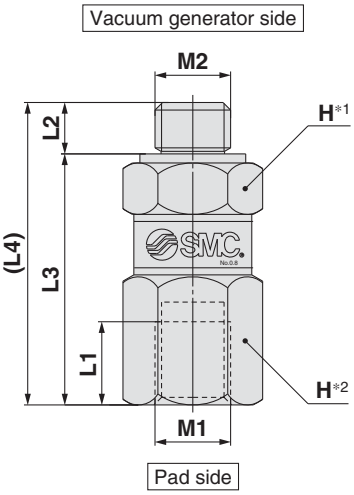

ZP2V-B5-□
ZP2V-B6-□

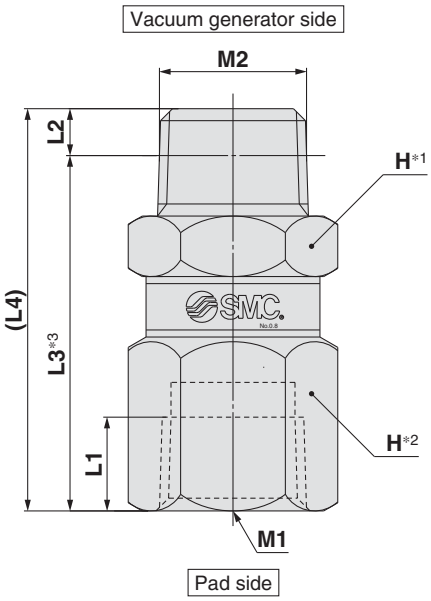

ZP2V-B01-□
ZP2V-BN1-□

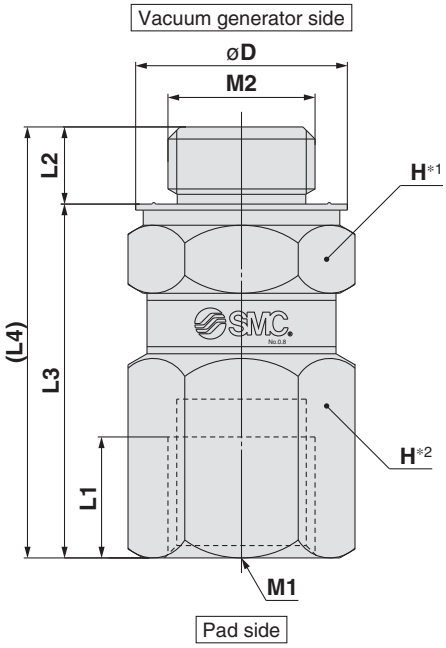

ZP2V-BG1-□

∗1 The place at the vacuum generator side where the tool is applied.
∗2 The place at the pad side where the tool is applied.
∗3 Referential dimensions after the R, NPT thread is screwed.

(mm)

Model	M1	M2	L1	L2	L3	L4	H (Width across flat)	øD	W (g)	Tightening torque (N·m) Note)
ZP2V-A5-□	M5 x 0.8	M5 x 0.8	3.4	4.5	14.7	18.1	8	—	6	1.0 to 1.5
ZP2V-A8-□	M8 x 1.25	M8 x 1.25	5.9	8	20.1	26	12	—	18	5.5 to 6.0
ZP2V-A01-□	R1/8	Rc1/8	3.1	6.2	22.6	25.7	12	—	18	7.0 to 9.0
ZP2V-AG1-□	G1/8	G1/8	5.1	8	22.5	27.6	13	14	23	5.5 to 6.0
ZP2V-AN1-□	NPT1/8	NPT1/8	3.2	6.9	23.3	26.5	12	—	23	7.0 to 9.0
ZP2V-B5-□	M5 x 0.8	M5 x 0.8	5.5	3.4	16.6	20	8	—	7	1.0 to 1.5
ZP2V-B6-□	M6 x 1	M6 x 1	5	4.5	16.2	20.7	8	—	7	2.0 to 2.5
ZP2V-B01-□	Rc1/8	R1/8	6.2	3.1	23.5	26.6	12	—	19	7.0 to 9.0
ZP2V-BG1-□	G1/8	G1/8	8	5.1	23.4	28.5	13	14	24	5.5 to 6.0
ZP2V-BN1-□	NPT1/8	NPT1/8	6.9	3.2	24.2	27.4	12	—	20	7.0 to 9.0

Note) When mounting and removing the product, apply a wrench or torque wrench to the place shown in Figures above.
When mounting, tighten to the torque specified in the table.

Adapter/Buffer Applicable Pad List

Series ZP2 Mounting Adapter Part No.

Adapter model		Applicable pad model Series ZP2	Page
ZP2A-001	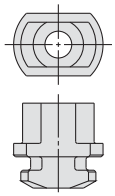	ZP2-3507W□ ZP2-4010W□ ZP2-5010W□ ZP2-6010W□	P. 69
ZP2A-002	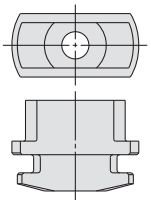	ZP2-4020W□ ZP2-5020W□ ZP2-6020W□ ZP2-8020W□	P. 69
ZP2A-003	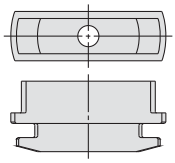	ZP2-4030W□ ZP2-5030W□ ZP2-6030W□ ZP2-8030W□	P. 69
ZP2A-M01P	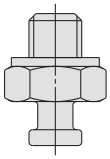	ZP2-B02MU□ ZP2-B035MU□ ZP2-B04MU□ ZP2-B05MU□ ZP2-B04MB□	P. 69
ZP2A-M02*	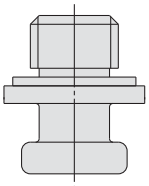	ZP2-B06MU□ ZP2-B08MU□ ZP2-B10MU□ ZP2-B15MU□ ZP2-B06MB□ ZP2-B08MB□ ZP2-B10MT□ ZP2-B15MT□	P. 69
ZP2A-M03*	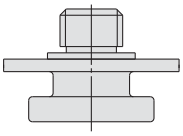	ZP2-B20MT□ ZP2-B25MT□ ZP2-B30MT□	P. 69
ZP2A-M04	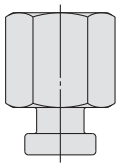	ZP2-B06MU□ ZP2-B08MU□ ZP2-B10MU□ ZP2-B15MU□ ZP2-B06MB□ ZP2-B08MB□ ZP2-B10MT□ ZP2-B15MT□	P. 69
ZP2A-M05	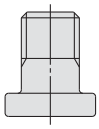	ZP2-B10MB□ ZP2-B15MB□	P. 69
ZP2A-M06	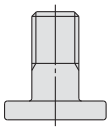	ZP2-B20MB□	P. 70

Adapter model		Applicable pad model Series ZP2	Page
ZP2A-Z01P	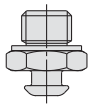	ZP2-B02EU□ ZP2-B04EU□ ZP2-B06EU□ ZP2-08EU□ ZP2-15EU□	P. 70
ZP2A-Z02P		ZP2-B02EU□ ZP2-B04EU□ ZP2-B06EU□ ZP2-08EU□ ZP2-15EU□	P. 70
ZP2A-Z21P	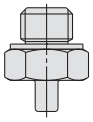	ZP2-08AN□ ZP2-11AN□	P. 70
ZP2A-S01P		ZP2-04S□	P. 70
ZP2A-S02P	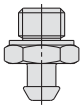	ZP2-06S□	P. 70
ZP2A-S03P	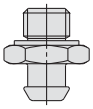	ZP2-08S□	P. 70
ZP2A-S04P	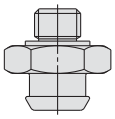	ZP2-10S□	P. 70
ZP2A-S05P	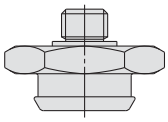	ZP2-15S□	P. 71
ZP2A-S11	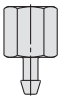	ZP2-04S□	P. 71
ZP2A-S12	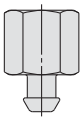	ZP2-06S□	P. 71
ZP2A-S13	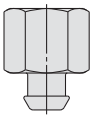	ZP2-08S□	P. 71
ZP2A-S14	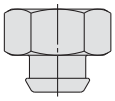	ZP2-10S□	P. 71
ZP2A-S15	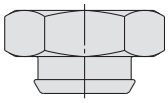	ZP2-15S□	P. 71

Series ZP Mounting Adapter Part No.

Adapter model		Applicable pad model		Page
		Series ZP	Series ZP2	
ZPT1-A5, A6 ZPT1-B4, B5	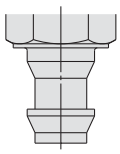	ZP (02, 04, 06, 08) U□ ZP (06, 08) B□ ZP (10, 13, 16) UT□ ZP (10, 13, 16) CT□ ZP2004U□ ZP3507U□ ZP4010U□	ZP2-03U□ ZP2-B04U□ ZP2-B06C□ ZP2-07C□ ZP2-B08C□ ZP2-B06B□ ZP2-B08B□ ZP2-05UT□ ZP2-06UT□ ZP2-11UT□ ZP2-14UT□ ZP2-18UT□ ZP2-20UT□ ZP2-06J□ ZP2-B10J□ ZP2-B15J□ ZP2-04UCL ZP2-06UCL ZP2-08UCL	P. 72
ZPT2-A5, A6 ZPT2-B5, B6 B01, N01 T01	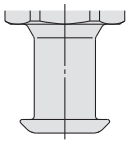	ZP (10, 13, 16) U□ ZP (10, 13, 16) C□ ZP (10, 13, 16) B□ ZP (10, 16) D□	ZP2-09J□ ZP2-14J□ ZP2-16J□ ZP2-10UCL ZP2-16UCL	P. 72 P. 73
ZPT3-A6, A8 ZPT3-B5, B6, B8 B01, N01 T01	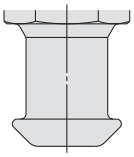	ZP (20, 25, 32) U□ ZP (20, 25, 32) C□ ZP (20, 25, 32) B□ ZP25D□	ZP2-B25J□ ZP2-B30J□ ZP2-25UCL ZP2-32UCL	P. 72 P. 73
ZPT4-A6, A8 ZPT4-B6, B8 B01, N01 T01	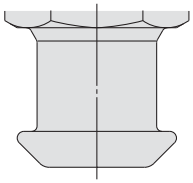	ZP (40, 50) U□ ZP (40, 50) C□ ZP (40, 50) B□ ZP40D□	ZP2-40UCL ZP2-50UCL	P. 72 P. 73

Adapter Assembly Part No. (For Heavy-duty Ball Joint)

Adapter assembly model		Applicable pad model		Page
		Series ZP		
ZP2A-TF1	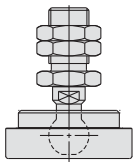	ZP40H□ ZP50H□	ZP40HB□ ZP50HB□	P. 74
ZP2A-TF2		ZP63H□ ZP80H□	ZP63HB□ ZP80HB□	P. 74
ZP2A-TF3		ZP100H□ ZP125H□	ZP100HB□ ZP125HB□	P. 74
ZP2A-XF1	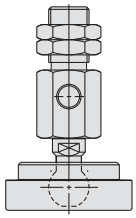	ZP40H□ ZP50H□	ZP40HB□ ZP50HB□	P. 74
ZP2A-XF2		ZP63H□ ZP80H□	ZP63HB□ ZP80HB□	P. 74
ZP2A-XF3		ZP100H□ ZP125H□	ZP100HB□ ZP125HB□	P. 74

Adapter Assembly Part No. (for Heavy-duty)

Adapter assembly model		Applicable pad model Series ZP		Page
ZPA-T1-B*	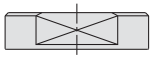	ZP40H□ ZP50H□	ZP40HB□ ZP50HB□	P. 75
ZPA-T2-B*		ZP63H□ ZP80H□	ZP63HB□ ZP80HB□	P. 75
ZPA-T3-B*		ZP100H□ ZP125H□	ZP100HB□ ZP125HB□	P. 75
ZPA-T1-*01	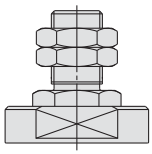	ZP40H□ ZP50H□	ZP40HB□ ZP50HB□	P. 75
ZPA-T2-*01		ZP63H□ ZP80H□	ZP63HB□ ZP80HB□	P. 75
ZPA-T3-*01		ZP100H□ ZP125H□	ZP100HB□ ZP125HB□	P. 75
ZPA-X1-*01-B*	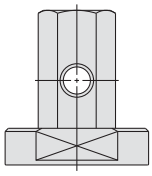	ZP40H□ ZP50H□	ZP40HB□ ZP50HB□	P. 76
ZPA-X2-*01-B*		ZP63H□ ZP80H□	ZP63HB□ ZP80HB□	P. 76
ZPA-X3-*01-B*		ZP100H□ ZP125H□	ZP100HB□ ZP125HB□	P. 76

Buffer Assembly Part No. (for Ball Spline)

Buffer assembly model		Applicable pad model Series ZP	Page
ZP2B-T3S6	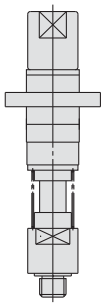	ZP02U□ ZP04U□ ZP06U□ ZP08U□	P. 77

Buffer Assembly Part No. (for Heavy-duty Ball Joint)

Buffer assembly model		Applicable pad model Series ZP	Page
ZP2B-TF1 (JB/JF)◆	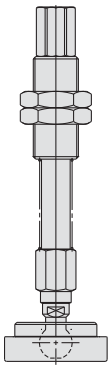	ZP40H□ ZP50H□ ZP40HB□ ZP50HB□	P. 78
ZP2B-TF2 (JB/JF)◆		ZP63H□ ZP80H□ ZP63HB□ ZP80HB□	P. 78
ZP2B-TF3 (JB/JF)◆		ZP100H□ ZP125H□ ZP100HB□ ZP125HB□	P. 78
ZP2B-XF1 (JB/JF)◆	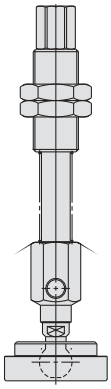	ZP40H□ ZP50H□ ZP40HB□ ZP50HB□	P. 79
ZP2B-XF2 (JB/JF)◆		ZP63H□ ZP80H□ ZP63HB□ ZP80HB□	P. 79
ZP2B-XF3 (JB/JF)◆		ZP100H□ ZP125H□ ZP100HB□ ZP125HB□	P. 79

Buffer Assembly Part No. (for Heavy-duty)

Buffer assembly model		Applicable pad model Series ZP	Page
ZPB-T1 (J/JB/JF)◆-∗01	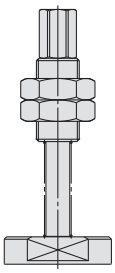	ZP40H□ ZP50H□ ZP40HB□ ZP50HB□	P. 80 P. 81
ZPB-T2 (J/JB/JF)◆-∗01		ZP63H□ ZP80H□ ZP63HB□ ZP80HB□	P. 80 P. 81
ZPB-T3 (J/JB/JF)◆-∗01		ZP100H□ ZP125H□ ZP100HB□ ZP125HB□	P. 80 P. 81
ZPB-X1 (J/JB/JF)◆-∗01	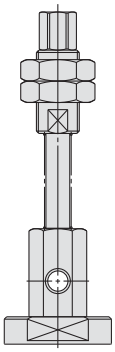	ZP40H□ ZP50H□ ZP40HB□ ZP50HB□	P. 82 P. 83
ZPB-X2 (J/JB/JF)◆-∗01		ZP63H□ ZP80H□ ZP63HB□ ZP80HB□	P. 82 P. 83
ZPB-X3 (J/JB/JF)◆-∗01		ZP100H□ ZP125H□ ZP100HB□ ZP125HB□	P. 82 P. 83

Mounting Adapter Part No.

Adapter part no.	ZP2A-001

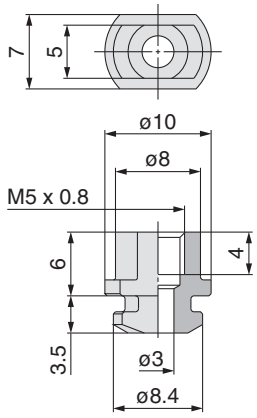

Applicable pad part no.
ZP2-3507W
ZP2-4010W
ZP2-5010W
ZP2-6010W

Adapter part no.	ZP2A-M02*

With gasket: **ZP2A-M02P**
Without gasket: **ZP2A-M02**

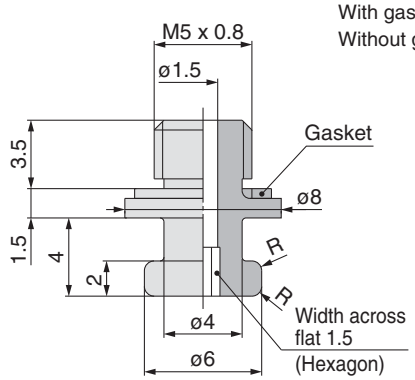

Applicable pad part no.
ZP2-B06MU
ZP2-B08MU
ZP2-B10MU
ZP2-B15MU
ZP2-B10MT
ZP2-B15MT
ZP2-B06MB
ZP2-B08MB

Adapter part no.	ZP2A-002

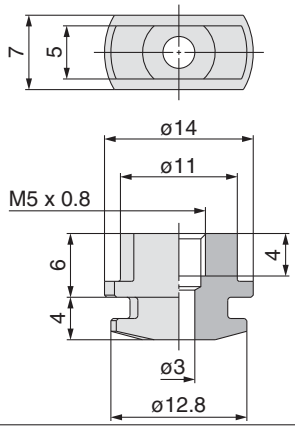

Applicable pad part no.
ZP2-4020W
ZP2-5020W
ZP2-6020W
ZP2-8020W

Adapter part no.	ZP2A-M03*

With gasket: **ZP2A-M03P**
Without gasket: **ZP2A-M03**

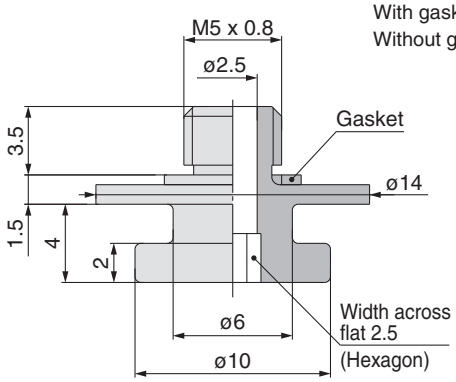

Applicable pad part no.
ZP2-B20MT
ZP2-B25MT
ZP2-B30MT

Adapter part no.	ZP2A-003

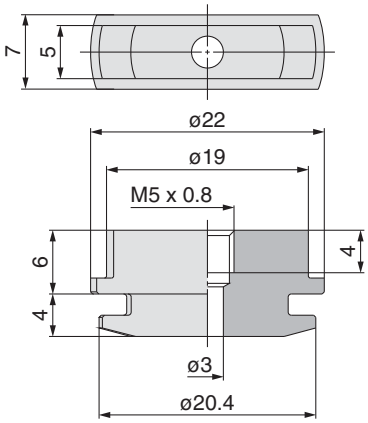

Applicable pad part no.
ZP2-4030W
ZP2-5030W
ZP2-6030W
ZP2-8030W

Adapter part no.	ZP2A-M04

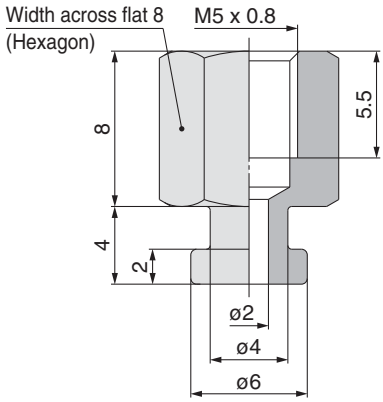

Applicable pad part no.
ZP2-B06MU
ZP2-B08MU
ZP2-B10MU
ZP2-B15MU
ZP2-B10MT
ZP2-B15MT
ZP2-B06MB
ZP2-B08MB

Adapter part no.	ZP2A-M01P

With gasket: **ZP2A-M01P**

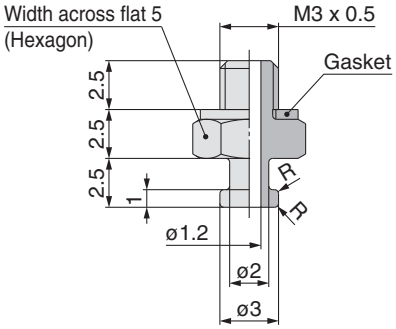

Applicable pad part no.
ZP2-B02MU
ZP2-B035MU
ZP2-B04MU
ZP2-B05MU
ZP2-B04MB

Adapter part no.	ZP2A-M05

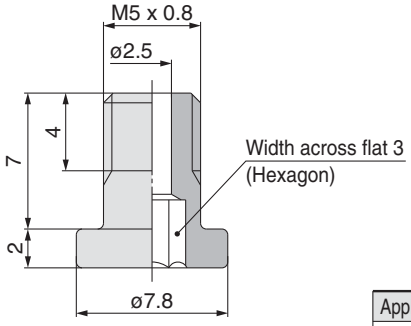

Applicable pad part no.
ZP2-B10MB
ZP2-B15MB

Adapter part no.	ZP2A-M06

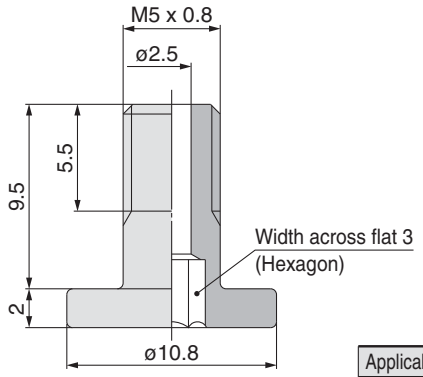

Applicable pad part no.
ZP2-B20MB

Adapter part no.	ZP2A-S01P

With gasket: **ZP2A-S01P**

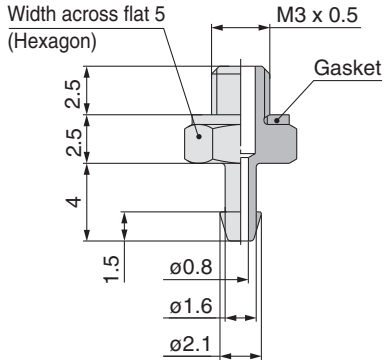

Applicable pad part no.
ZP2-04S

Adapter part no.	ZP2A-Z01P

With gasket: **ZP2A-Z01P**

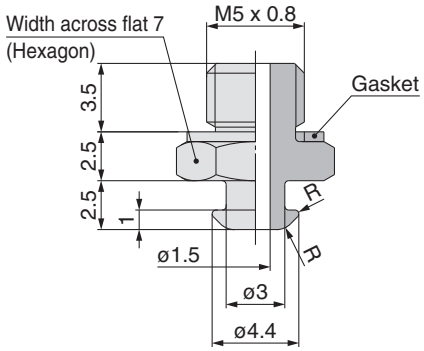

Applicable pad part no.
ZP2-B02EU ZP2-B04EU ZP2-B06EU ZP2-08EU ZP2-15EU

Adapter part no.	ZP2A-S02P

With gasket: **ZP2A-S02P**

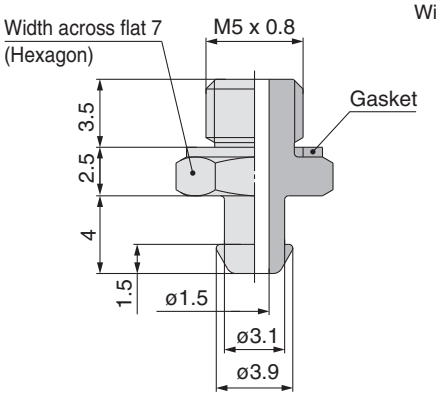

Applicable pad part no.
ZP2-06S

Adapter part no.	ZP2A-Z02P

With gasket: **ZP2A-Z02P**

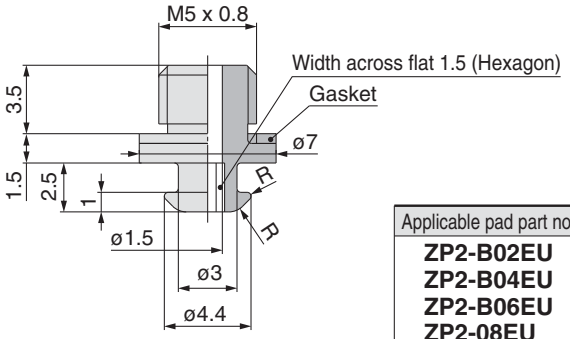

Applicable pad part no.
ZP2-B02EU ZP2-B04EU ZP2-B06EU ZP2-08EU ZP2-15EU

Adapter part no.	ZP2A-S03P

With gasket: **ZP2A-S03P**

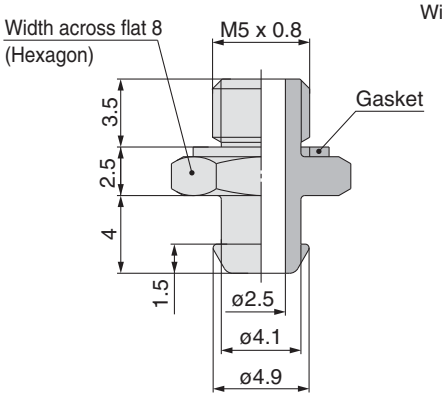

Applicable pad part no.
ZP2-08S

Adapter part no.	ZP2A-Z21P

With gasket: **ZP2A-Z21P**

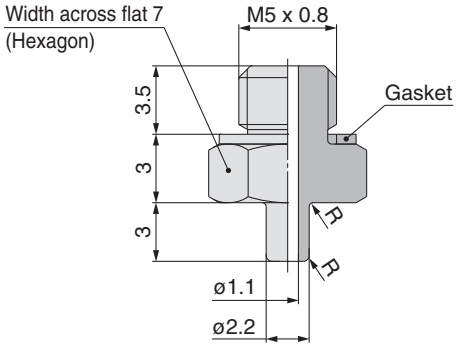

Applicable pad part no.
ZP2-08AN ZP2-11AN

Adapter part no.	ZP2A-S04P

With gasket: **ZP2A-S04P**

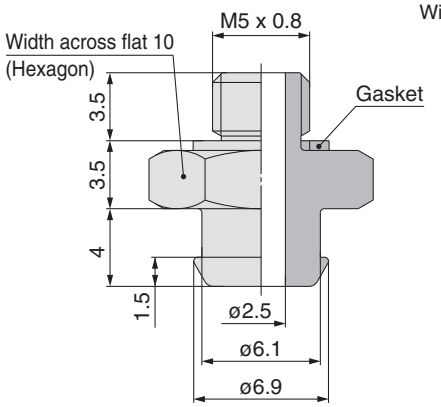

Applicable pad part no.
ZP2-10S

Adapter part no.	ZP2A-S05P

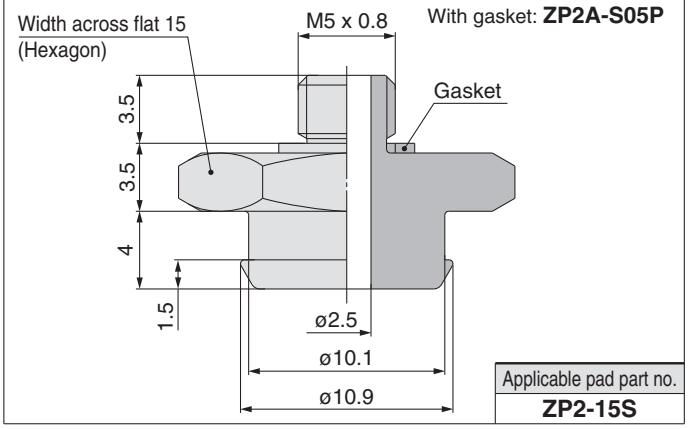

Applicable pad part no.
ZP2-15S

Adapter part no.	ZP2A-S14

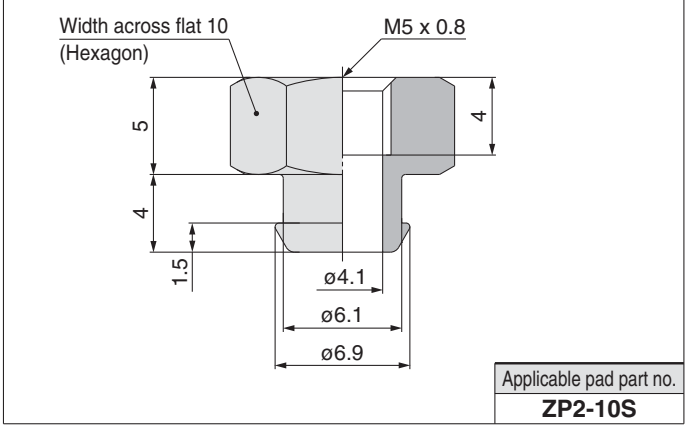

Applicable pad part no.
ZP2-10S

Adapter part no.	ZP2A-S11

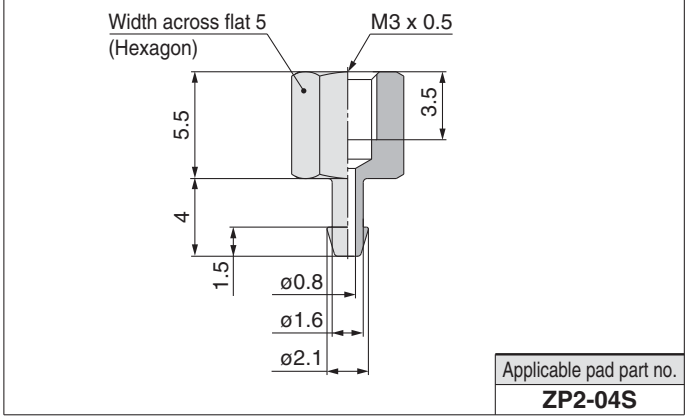

Applicable pad part no.
ZP2-04S

Adapter part no.	ZP2A-S15

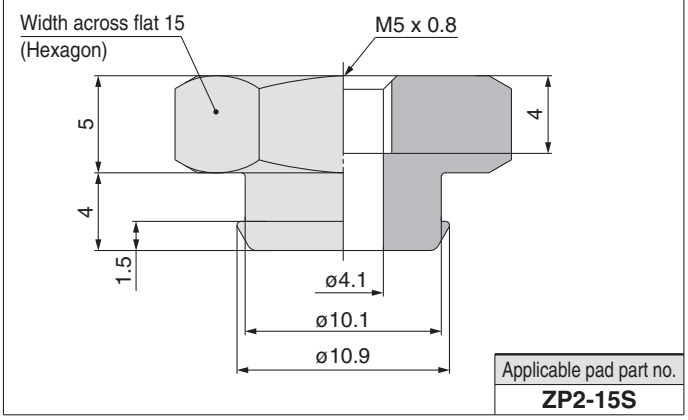

Applicable pad part no.
ZP2-15S

Adapter part no.	ZP2A-S12

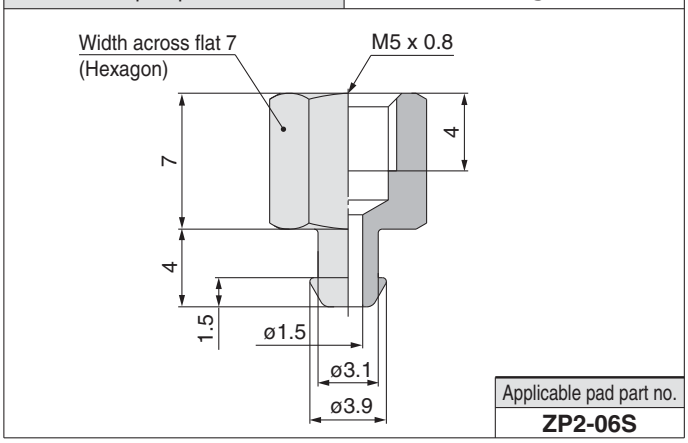

Applicable pad part no.
ZP2-06S

Adapter part no.	ZP2A-S13

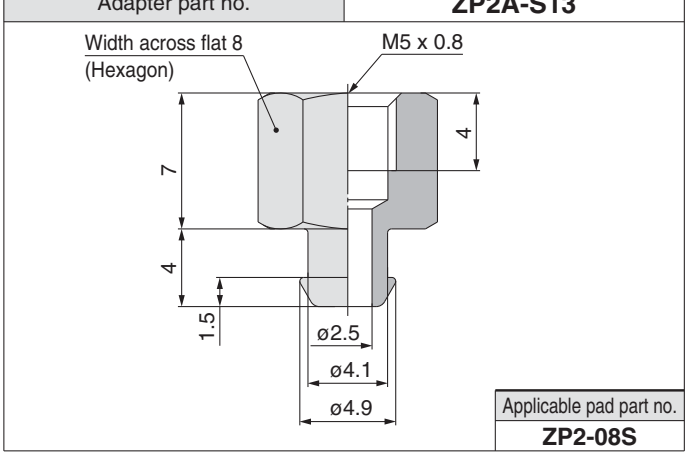

Applicable pad part no.
ZP2-08S

Mounting Adapter Part No.

∗Refer to page 66 for applicable pad part no.

Adapter part no.	ZPT1-A5/A6

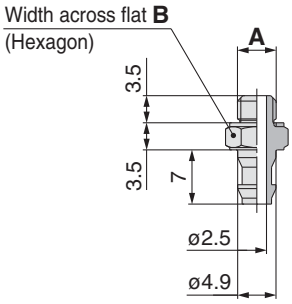

Dimensions

Model	A	B
ZPT1-A5	M5 x 0.8	7
ZPT1-A6	M6 x 1	8

Adapter part no.	ZPT3-A8

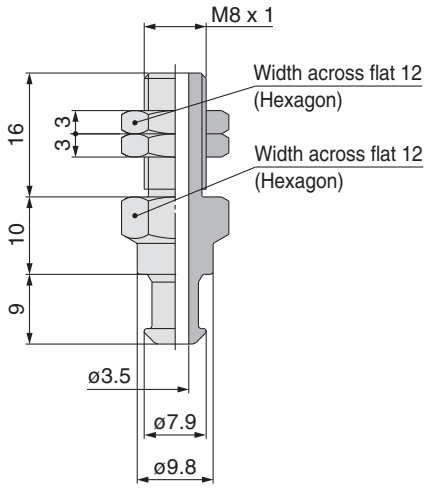

Adapter part no.	ZPT2-A5/A6

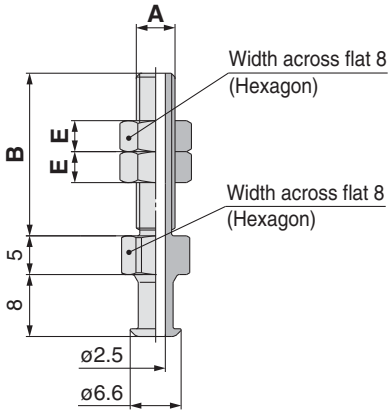

Dimensions

Model	A	B	E
ZPT2-A5	M5 x 0.8	21	4
ZPT2-A6	M6 x 1	26	3

Adapter part no.	ZPT4-A6/A8

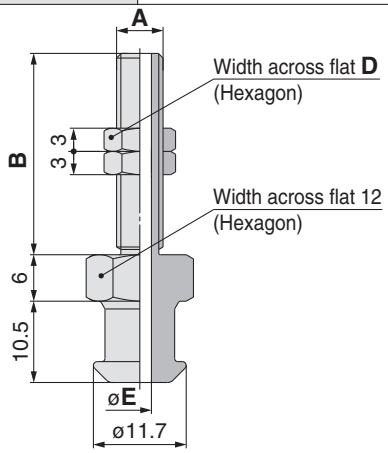

Dimensions

Model	A	B	D	E
ZPT4-A6	M6 x 1	26	8	3
ZPT4-A8	M8 x 1	16	12	4.5

Adapter part no.	ZPT3-A6

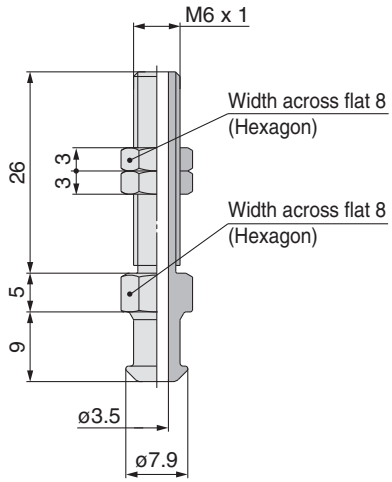

Adapter part no.	ZPT1-B4/B5

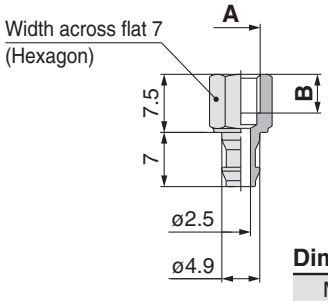

Dimensions

Model	A	B
ZPT1-B4	M4 x 0.7	4
ZPT1-B5	M5 x 0.8	5

* Refer to page 66 for applicable pad part no.

Adapter part no.	ZPT2-B5/B6

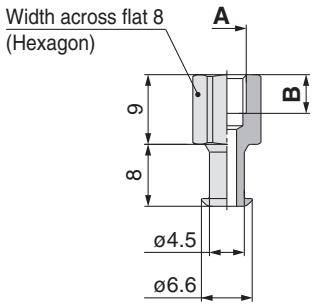

Dimensions

Model	A	B
ZPT2-B5	M5 x 0.8	5
ZPT2-B6	M6 x 1	6

Adapter part no.	ZPT3-B8/B01/N01/T01

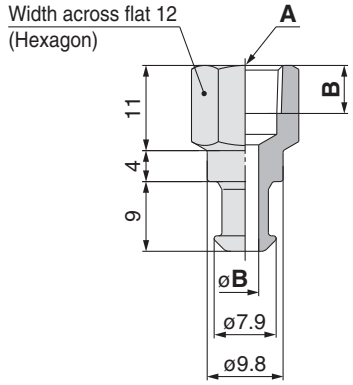

Dimensions

Model	A	B
ZPT3-B8	M8 x 1.25	3.5
ZPT3-B01	Rc1/8	6.2
ZPT3-N01	NPT1/8	6.9
ZPT3-T01	NPTF1/8	6.9

Adapter part no.	ZPT2-B01/N01/T01

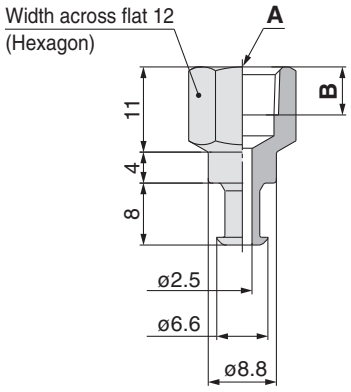

Dimensions

Model	A	B
ZPT2-B01	Rc1/8	6.2
ZPT2-N01	NPT1/8	6.9
ZPT2-T01	NPTF1/8	6.9

Adapter part no.	ZPT4-B6/B8

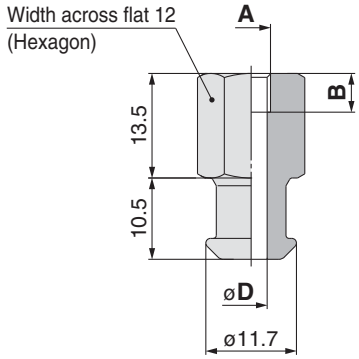

Dimensions

Model	A	B	D
ZPT4-B6	M6 x 1	6	4.9
ZPT4-B8	M8 x 1.25	8	7.5

Adapter part no.	ZPT3-B5/B6

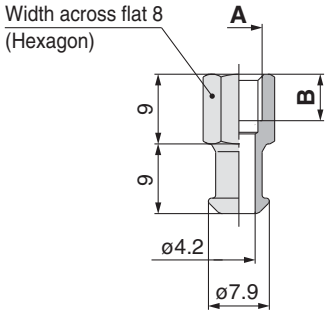

Dimensions

Model	A	B
ZPT3-B5	M5 x 0.8	5
ZPT3-B6	M6 x 1	6

Adapter part no.	ZPT4-B01/N01/T01

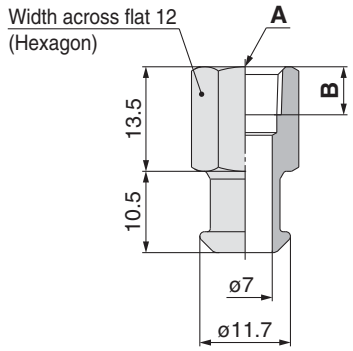

Dimensions

Model	A	B
ZPT4-B01	Rc1/8	6.2
ZPT4-N01	NPT1/8	6.9
ZPT4-T01	NPTF1/8	6.9

Adapter Assembly Part No.

Heavy-duty Ball Joint Adapter Assembly Part No. (Type T)

Adapter assembly part no.	Applicable pad part no.
ZP2A-TF1	**ZP40H□ ZP40HB□** **ZP50H□ ZP50HB□**

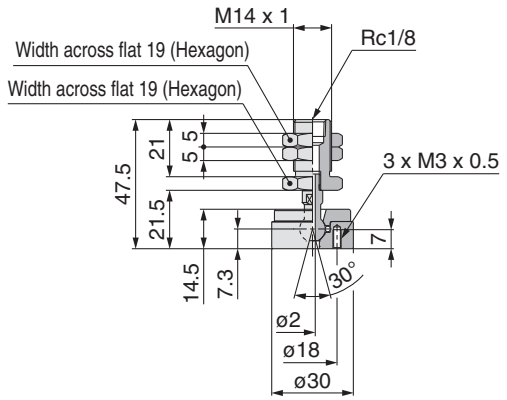

∗ With three M3 bolts

Adapter assembly part no.	Applicable pad part no.
ZP2A-TF2	**ZP63H□ ZP63HB□** **ZP80H□ ZP80HB□**

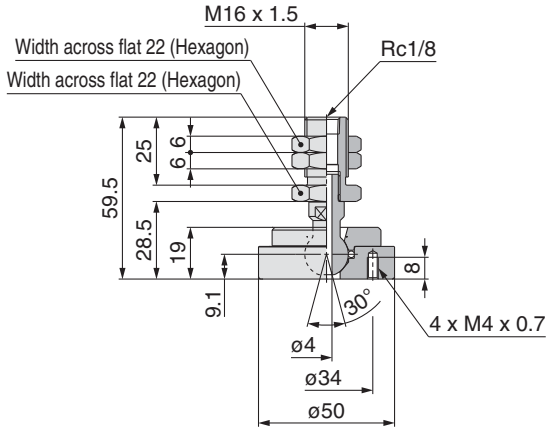

∗ With four M4 bolts

Adapter assembly part no.	Applicable pad part no.
ZP2A-TF3	**ZP100H□ ZP100HB□** **ZP125H□ ZP125HB□**

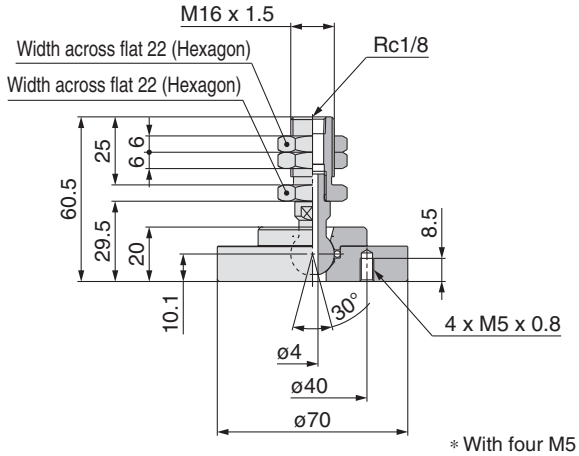

∗ With four M5 bolts

Heavy-duty Ball Joint Adapter Assembly Part No. (Type X)

Adapter assembly part no.	Applicable pad part no.
ZP2A-XF1	**ZP40H□ ZP40HB□** **ZP50H□ ZP50HB□**

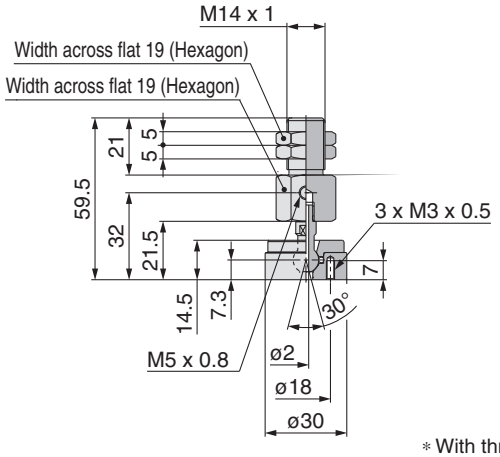

∗ With three M3 bolts

Adapter assembly part no.	Applicable pad part no.
ZP2A-XF2	**ZP63H□ ZP63HB□** **ZP80H□ ZP80HB□**

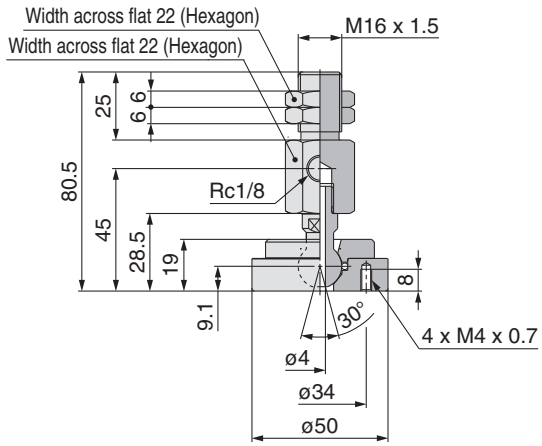

∗ With four M4 bolts

Adapter assembly part no.	Applicable pad part no.
ZP2A-XF3	**ZP100H□ ZP100HB□** **ZP125H□ ZP125HB□**

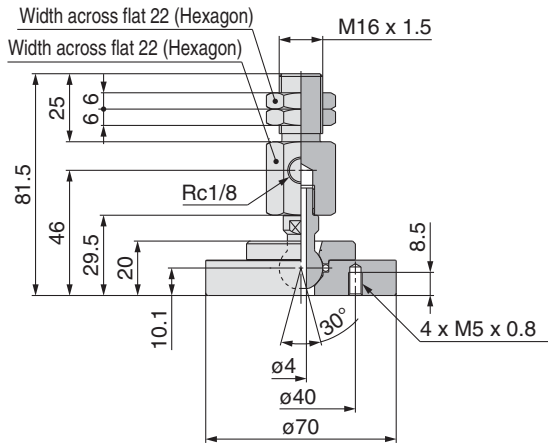

∗ With four M5 bolts

Adapter Assembly Part No.

Heavy-duty Adapter Assembly Part No. (Type T, Female thread)

Adapter assembly part no.	Applicable pad part no.
ZPA-T1-B8	ZP40H□ ZP50H□ ZP40HB□ ZP50HB□
ZPA-T1-B10	

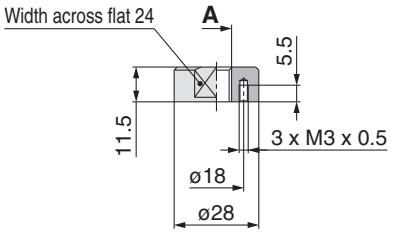

Dimensions

Model	A
ZPA-T1-B8	M8 x 1.25
ZPA-T1-B10	M10 x 1.5

∗ With three M3 bolts

Adapter assembly part no.	Applicable pad part no.
ZPA-T2-B8	ZP63H□ ZP80H□ ZP63HB□ ZP80HB□
ZPA-T2-B10	
ZPA-T2-B12	
ZPA-T2-B16	

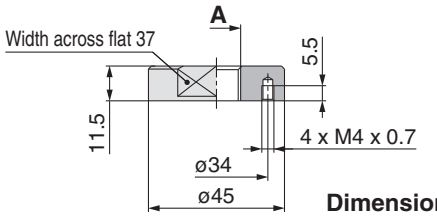

Dimensions

Model	A
ZPA-T2-B8	M8 x 1.25
ZPA-T2-B10	M10 x 1.5
ZPA-T2-B12	M12 x 1.75
ZPA-T2-B16	M16 x 1.5

∗ With four M4 bolts

Adapter assembly part no.	Applicable pad part no.
ZPA-T3-B12	ZP100H□ ZP125H□ ZP100HB□ ZP125HB□
ZPA-T3-B16	

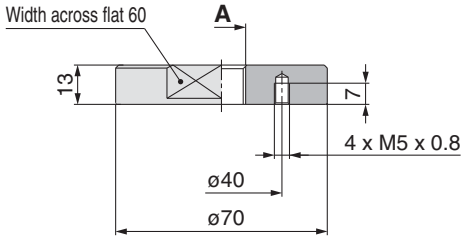

Dimensions

Model	A
ZPA-T3-B12	M12 x 1.75
ZPA-T3-B16	M16 x 1.5

∗ With four M5 bolts

Heavy-duty Adapter Assembly Part No. (Type T, Male thread)

Adapter assembly part no.	Applicable pad part no.
ZPA-T1-B01	ZP40H□ ZP50H□ ZP40HB□ ZP50HB□
ZPA-T1-N01	
ZPA-T1-T01	

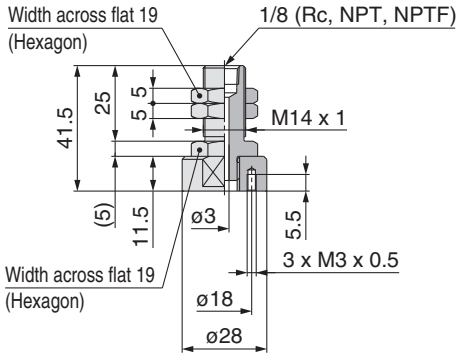

∗ With three M3 bolts

Adapter assembly part no.	Applicable pad part no.
ZPA-T2-B01	ZP63H□ ZP80H□ ZP63HB□ ZP80HB□
ZPA-T2-N01	
ZPA-T2-T01	

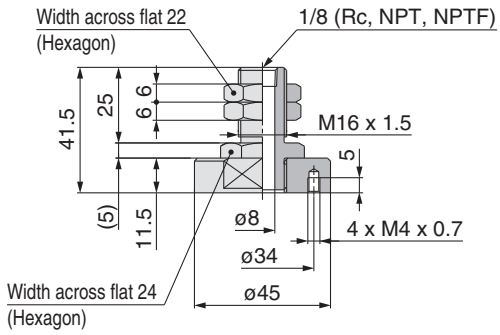

∗ With four M4 bolts

Adapter assembly part no.	Applicable pad part no.
ZPA-T3-B01	ZP100H□ ZP125H□ ZP100HB□ ZP125HB□
ZPA-T3-N01	
ZPA-T3-T01	

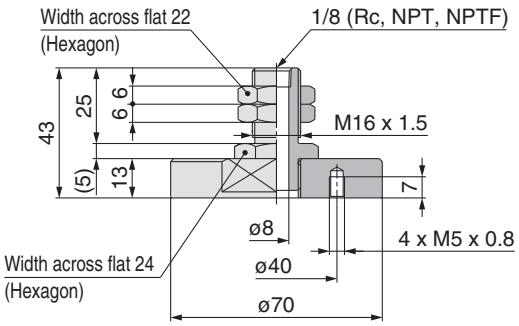

∗ With four M5 bolts

Heavy-duty Adapter Assembly Part No. (Type X, Female thread)

Adapter assembly part no.	Applicable pad part no.
ZPA-X1-B01-B8	**ZP40H□** **ZP50H□** **ZP40HB□** **ZP50HB□**
ZPA-X1-N01-B8	
ZPA-X1-T01-B8	
ZPA-X1-B01-B10	
ZPA-X1-N01-B10	
ZPA-X1-T01-B10	

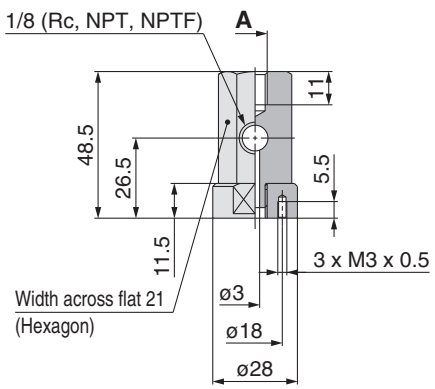

Dimensions

Model	A
ZPA-X1-□01-B8	M8 x 1.25
ZPA-X1-□01-B10	M10 x 1.5

∗ With three M3 bolts

Adapter assembly part no.	Applicable pad part no.
ZPA-X3-B01-B10	**ZP100H□** **ZP125H□** **ZP100HB□** **ZP125HB□**
ZPA-X3-N01-B10	
ZPA-X3-T01-B10	
ZPA-X3-B01-B12	
ZPA-X3-N01-B12	
ZPA-X3-T01-B12	

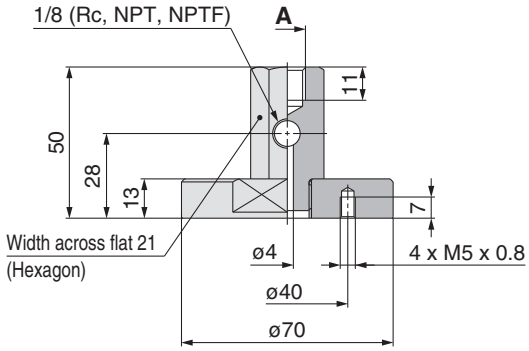

Dimensions

Model	A
ZPA-X3-□01-B10	M10 x 1.5
ZPA-X3-□01-B12	M12 x 1.75

∗ With four M5 bolts

Adapter assembly part no.	Applicable pad part no.
ZPA-X2-B01-B10	**ZP63H□** **ZP80H□** **ZP63HB□** **ZP80HB□**
ZPA-X2-N01-B10	
ZPA-X2-T01-B10	
ZPA-X2-B01-B12	
ZPA-X2-N01-B12	
ZPA-X2-T01-B12	

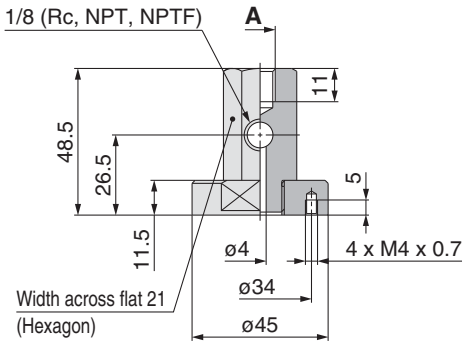

Dimensions

Model	A
ZPA-X2-□01-B10	M10 x 1.5
ZPA-X2-□01-B12	M12 x 1.75

∗ With four M4 bolts

Buffer Assembly Part No.

Ball Spline

Buffer assembly part no.
ZP2B-T3S6

Applicable pad part no.
ZP02U□
ZP04U□
ZP06U□
ZP08U□

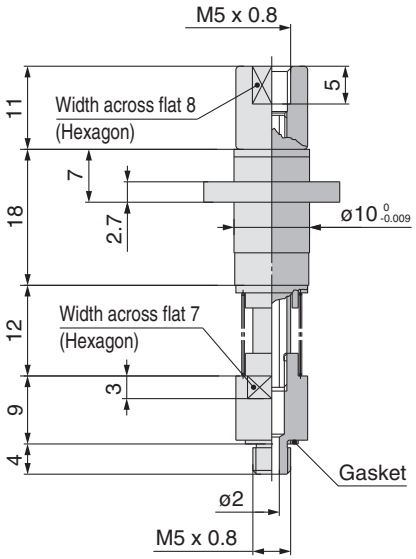

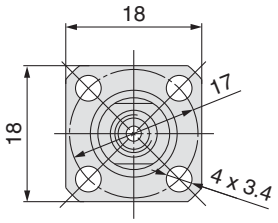

∗ Refer to the front matter 30 for nut tightening torque.

Heavy-duty Ball Joint Buffer Assembly Part No. (Type T)

Buffer assembly part no.	
Buffer body (Material: Brass)	Buffer body (Material: Steel)
ZP2B-TF1JB25	**ZP2B-TF1JF25**
ZP2B-TF1JB50	**ZP2B-TF1JF50**
ZP2B-TF1JB75	**ZP2B-TF1JF75**

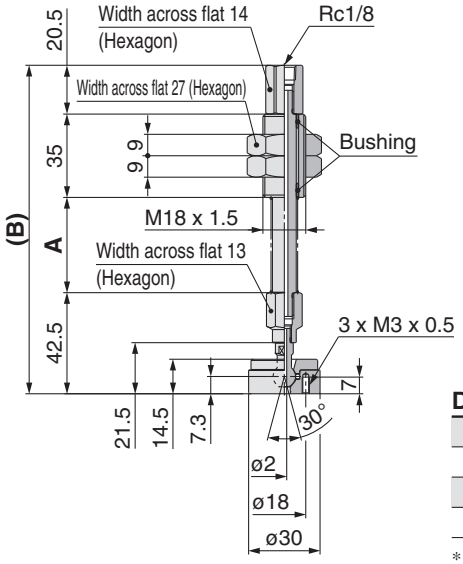

Applicable pad part no.

ZP40H□
ZP50H□
ZP40HB□
ZP50HB□

Dimensions

Model	A	B
ZP2B-TF1(JB/JF)25	40	138
ZP2B-TF1(JB/JF)50	75	173
ZP2B-TF1(JB/JF)75	111	209

∗ With three M3 bolts

Buffer assembly part no.	
Buffer body (Material: Brass)	Buffer body (Material: Steel)
ZP2B-TF2JB25	**ZP2B-TF2JF25**
ZP2B-TF2JB50	**ZP2B-TF2JF50**
ZP2B-TF2JB75	**ZP2B-TF2JF75**
ZP2B-TF2JB100	**ZP2B-TF2JF100**

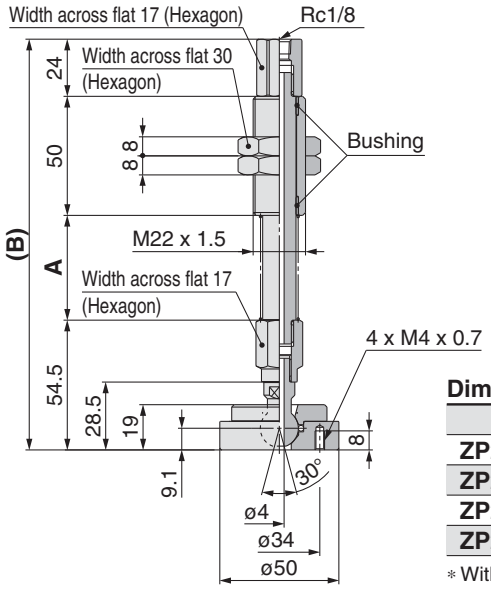

Applicable pad part no.

ZP63H□
ZP80H□
ZP63HB□
ZP80HB□

Dimensions

Model	A	B
ZP2B-TF2(JB/JF)25	44	172.5
ZP2B-TF2(JB/JF)50	80	208.5
ZP2B-TF2(JB/JF)75	120	248.5
ZP2B-TF2(JB/JF)100	155	283.5

∗ With four M4 bolts

Buffer assembly part no.	
Buffer body (Material: Brass)	Buffer body (Material: Steel)
ZP2B-TF3JB25	**ZP2B-TF3JF25**
ZP2B-TF3JB50	**ZP2B-TF3JF50**
ZP2B-TF3JB75	**ZP2B-TF3JF75**
ZP2B-TF3JB100	**ZP2B-TF3JF100**

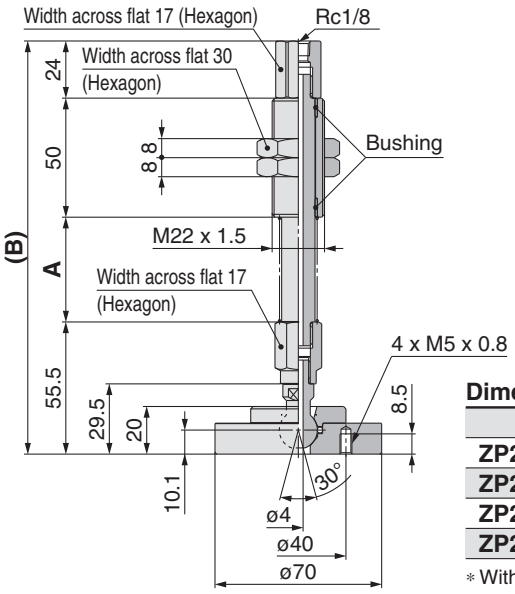

Applicable pad part no.

ZP100H□
ZP125H□
ZP100HB□
ZP125HB□

Dimensions

Model	A	B
ZP2B-TF3(JB/JF)25	44	173.5
ZP2B-TF3(JB/JF)50	80	209.5
ZP2B-TF3(JB/JF)75	120	249.5
ZP2B-TF3(JB/JF)100	155	284.5

∗ With four M5 bolts

∗ Refer to the front matter 30 for nut tightening torque.

Heavy-duty Ball Joint Buffer Assembly Part No. (Type X)

Buffer assembly part no.	
Buffer body (Material: Brass)	Buffer body (Material: Steel)
ZP2B-XF1JB25	ZP2B-XF1JF25
ZP2B-XF1JB50	ZP2B-XF1JF50
ZP2B-XF1JB75	ZP2B-XF1JF75

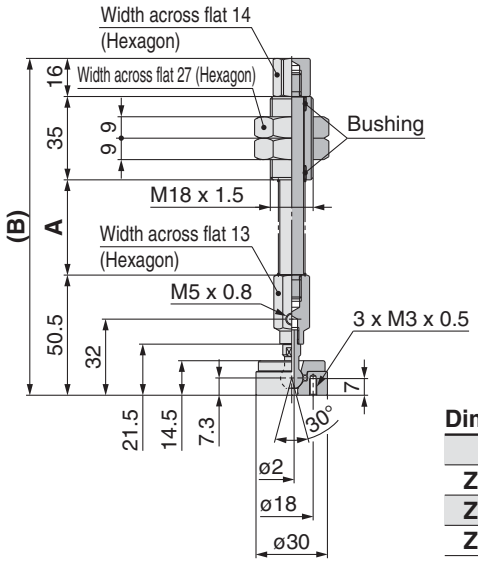

Applicable pad part no.
ZP40H□
ZP50H□
ZP40HB□
ZP50HB□

Dimensions

Model	A	B
ZP2B-XF1(JB/JF)25	40	141.5
ZP2B-XF1(JB/JF)50	75	176.5
ZP2B-XF1(JB/JF)75	111	212.5

∗ With three M3 bolts

Buffer assembly part no.	
Buffer body (Material: Brass)	Buffer body (Material: Steel)
ZP2B-XF2JB25	ZP2B-XF2JF25
ZP2B-XF2JB50	ZP2B-XF2JF50
ZP2B-XF2JB75	ZP2B-XF2JF75
ZP2B-XF2JB100	ZP2B-XF2JF100

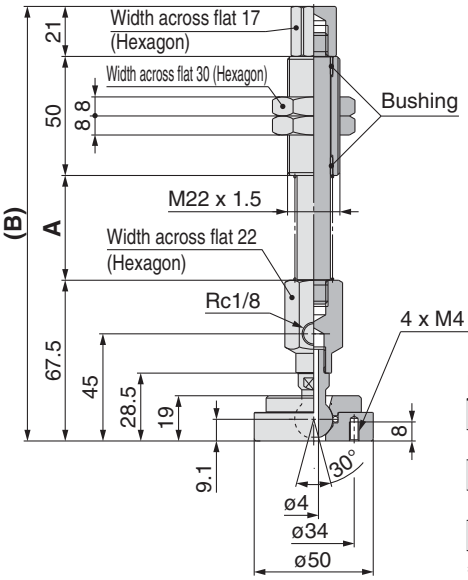

Applicable pad part no.
ZP63H□
ZP80H□
ZP63HB□
ZP80HB□

Dimensions

Model	A	B
ZP2B-XF2(JB/JF)25	44	182.5
ZP2B-XF2(JB/JF)50	80	218.5
ZP2B-XF2(JB/JF)75	120	258.5
ZP2B-XF2(JB/JF)100	155	293.5

∗ With four M4 bolts

Buffer assembly part no.	
Buffer body (Material: Brass)	Buffer body (Material: Steel)
ZP2B-XF3JB25	ZP2B-XF3JF25
ZP2B-XF3JB50	ZP2B-XF3JF50
ZP2B-XF3JB75	ZP2B-XF3JF75
ZP2B-XF3JB100	ZP2B-XF3JF100

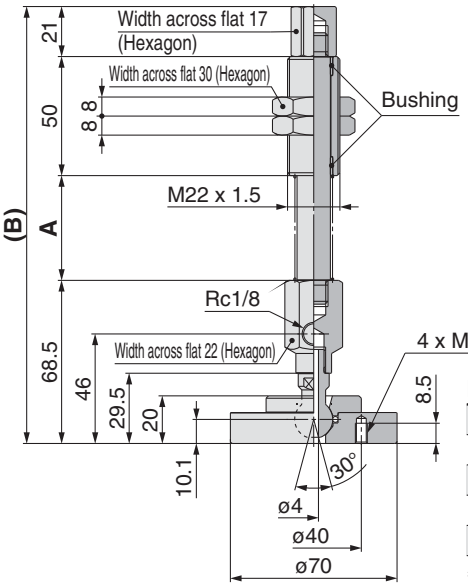

Applicable pad part no.
ZP100H□
ZP125H□
ZP100HB□
ZP125HB□

Dimensions

Model	A	B
ZP2B-XF3(JB/JF)25	44	183.5
ZP2B-XF3(JB/JF)50	80	219.5
ZP2B-XF3(JB/JF)75	120	259.5
ZP2B-XF3(JB/JF)100	155	294.5

∗ With four M5 bolts

Buffer Assembly Part No.

∗ Refer to the front matter 30 for nut tightening torque.

Heavy-duty Buffer Assembly Part No. (Type T)

Buffer assembly part no.
Buffer body (Material: Aluminum alloy)
ZPB-T1J25-B01
ZPB-T1J25-N01
ZPB-T1J25-T01
ZPB-T1J50-B01
ZPB-T1J50-N01
ZPB-T1J50-T01
ZPB-T1J75-B01
ZPB-T1J75-N01
ZPB-T1J75-T01

Applicable pad part no.
ZP40H□
ZP50H□
ZP40HB□
ZP50HB□

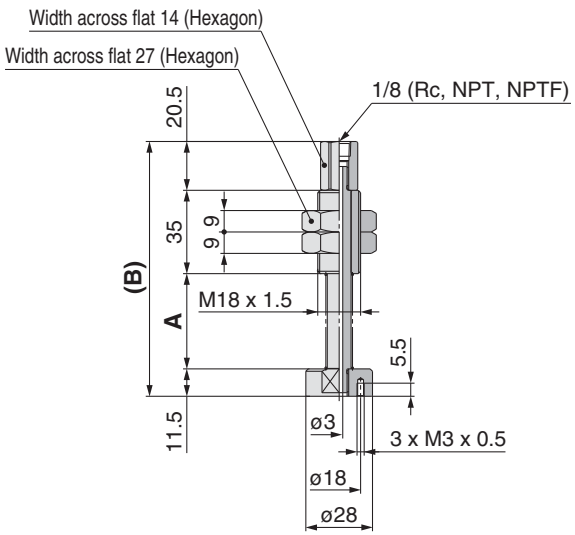

Dimensions

Model	A	B
ZPB-T1J25-□01	40	107
ZPB-T1J50-□01	75	142
ZPB-T1J75-□01	111	178

∗ With three M3 bolts

Buffer assembly part no.
Buffer body (Material: Aluminum alloy)
ZPB-T2J25-B01
ZPB-T2J25-N01
ZPB-T2J25-T01
ZPB-T2J50-B01
ZPB-T2J50-N01
ZPB-T2J50-T01
ZPB-T2J75-B01
ZPB-T2J75-N01
ZPB-T2J75-T01

Applicable pad part no.
ZP63H□
ZP80H□
ZP63HB□
ZP80HB□

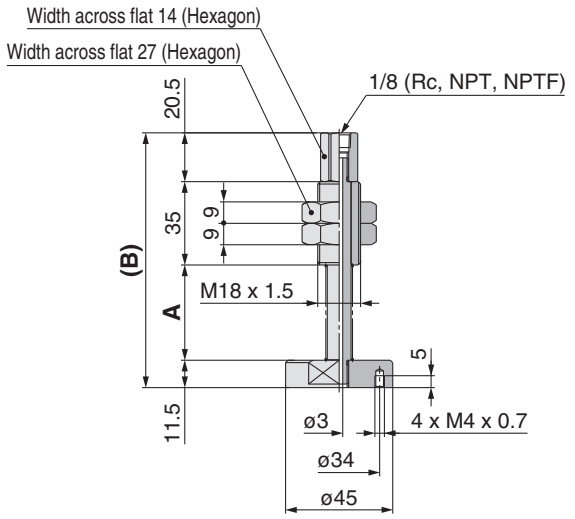

Dimensions

Model	A	B
ZPB-T2J25-□01	40	107
ZPB-T2J50-□01	75	142
ZPB-T2J75-□01	111	178

∗ With four M4 bolts

Buffer assembly part no.
Buffer body (Material: Aluminum alloy)
ZPB-T3J25-B01
ZPB-T3J25-N01
ZPB-T3J25-T01
ZPB-T3J50-B01
ZPB-T3J50-N01
ZPB-T3J50-T01
ZPB-T3J75-B01
ZPB-T3J75-N01
ZPB-T3J75-T01
ZPB-T3J100-B01
ZPB-T3J100-N01
ZPB-T3J100-T01

Applicable pad part no.
ZP100H□
ZP125H□
ZP100HB□
ZP125HB□

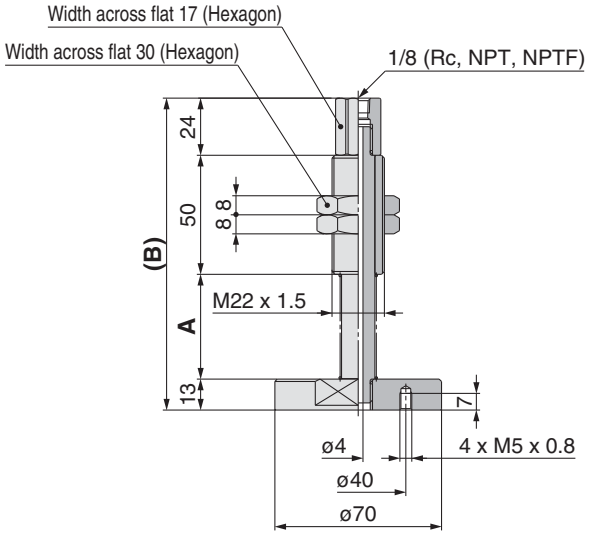

Dimensions

Model	A	B
ZPB-T3J25-□01	44	131
ZPB-T3J50-□01	80	167
ZPB-T3J75-□01	120	207
ZPB-T3J100-□01	155	242

∗ With four M5 bolts

∗ Refer to the front matter 30 for nut tightening torque.

Heavy-duty Buffer Assembly Part No. (Type T)

Buffer assembly part no.	
Buffer body (Material: Brass)	Buffer body (Material: Steel)
ZPB-T1JB25-B01	ZPB-T1JF25-B01
ZPB-T1JB25-N01	ZPB-T1JF25-N01
ZPB-T1JB25-T01	ZPB-T1JF25-T01
ZPB-T1JB50-B01	ZPB-T1JF50-B01
ZPB-T1JB50-N01	ZPB-T1JF50-N01
ZPB-T1JB50-T01	ZPB-T1JF50-T01
ZPB-T1JB75-B01	ZPB-T1JF75-B01
ZPB-T1JB75-N01	ZPB-T1JF75-N01
ZPB-T1JB75-T01	ZPB-T1JF75-T01

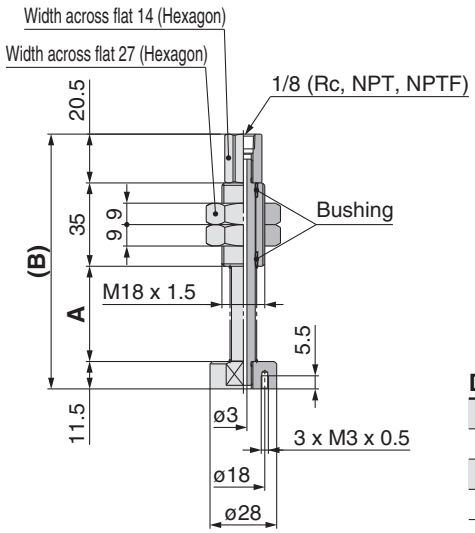

Applicable pad part no.
ZP40H□
ZP50H□
ZP40HB□
ZP50HB□

Dimensions

Model	A	B
ZPB-T1(JB/JF)25-□01	40	107
ZPB-T1(JB/JF)50-□01	75	142
ZPB-T1(JB/JF)75-□01	111	178

∗ With three M3 bolts

Buffer assembly part no.	
Buffer body (Material: Brass)	Buffer body (Material: Steel)
ZPB-T2JB25-B01	ZPB-T2JF25-B01
ZPB-T2JB25-N01	ZPB-T2JF25-N01
ZPB-T2JB25-T01	ZPB-T2JF25-T01
ZPB-T2JB50-B01	ZPB-T2JF50-B01
ZPB-T2JB50-N01	ZPB-T2JF50-N01
ZPB-T2JB50-T01	ZPB-T2JF50-T01
ZPB-T2JB75-B01	ZPB-T2JF75-B01
ZPB-T2JB75-N01	ZPB-T2JF75-N01
ZPB-T2JB75-T01	ZPB-T2JF75-T01

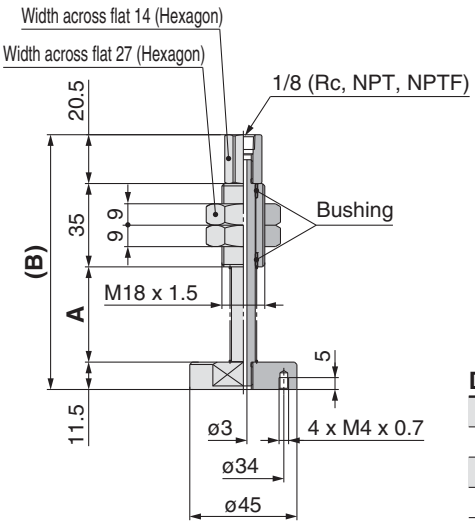

Applicable pad part no.
ZP63H□
ZP80H□
ZP63HB□
ZP80HB□

Dimensions

Model	A	B
ZPB-T2(JB/JF)25-□01	40	107
ZPB-T2(JB/JF)50-□01	75	142
ZPB-T2(JB/JF)75-□01	111	178

∗ With four M4 bolts

Buffer assembly part no.	
Buffer body (Material: Brass)	Buffer body (Material: Steel)
ZPB-T3JB25-B01	ZPB-T3JF25-B01
ZPB-T3JB25-N01	ZPB-T3JF25-N01
ZPB-T3JB25-T01	ZPB-T3JF25-T01
ZPB-T3JB50-B01	ZPB-T3JF50-B01
ZPB-T3JB50-N01	ZPB-T3JF50-N01
ZPB-T3JB50-T01	ZPB-T3JF50-T01
ZPB-T3JB75-B01	ZPB-T3JF75-B01
ZPB-T3JB75-N01	ZPB-T3JF75-N01
ZPB-T3JB75-T01	ZPB-T3JF75-T01
ZPB-T3JB100-B01	ZPB-T3JF100-B01
ZPB-T3JB100-N01	ZPB-T3JF100-N01
ZPB-T3JB100-T01	ZPB-T3JF100-T01

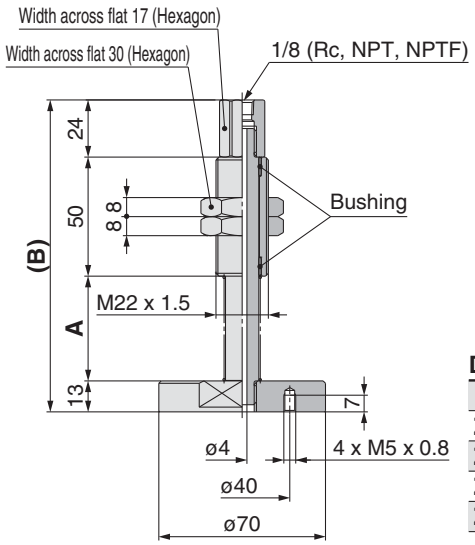

Applicable pad part no.
ZP100H□
ZP125H□
ZP100HB□
ZP125HB□

Dimensions

Model	A	B
ZPB-T3(JB/JF)25-□01	44	131
ZPB-T3(JB/JF)50-□01	80	167
ZPB-T3(JB/JF)75-□01	120	207
ZPB-T3(JB/JF)100-□01	155	242

∗ With four M5 bolts

∗ Refer to the front matter 30 for nut tightening torque.

Heavy-duty Buffer Assembly Part No. (Type X)

Buffer assembly part no.
Buffer body (Material: Aluminum alloy)
ZPB-X1J25-B01
ZPB-X1J25-N01
ZPB-X1J25-T01
ZPB-X1J50-B01
ZPB-X1J50-N01
ZPB-X1J50-T01
ZPB-X1J75-B01
ZPB-X1J75-N01
ZPB-X1J75-T01

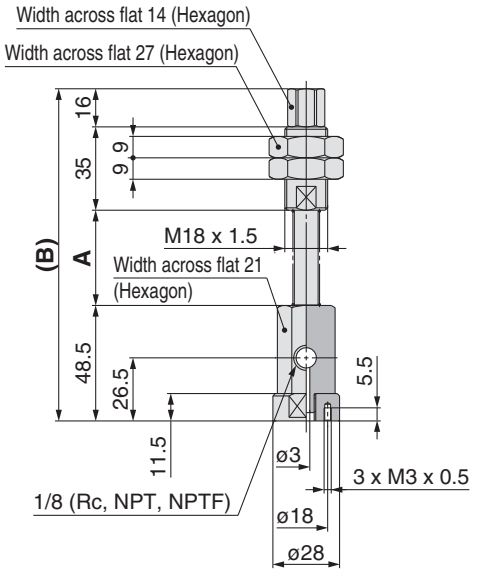

Applicable pad part no.
ZP40H□
ZP50H□
ZP40HB□
ZP50HB□

Dimensions

Model	A	B
ZPB-X1J25-□01	40	139.5
ZPB-X1J50-□01	75	174.5
ZPB-X1J75-□01	111	210.5

∗ With three M3 bolts

Buffer assembly part no.
Buffer body (Material: Aluminum alloy)
ZPB-X2J25-B01
ZPB-X2J25-N01
ZPB-X2J25-T01
ZPB-X2J50-B01
ZPB-X2J50-N01
ZPB-X2J50-T01
ZPB-X2J75-B01
ZPB-X2J75-N01
ZPB-X2J75-T01

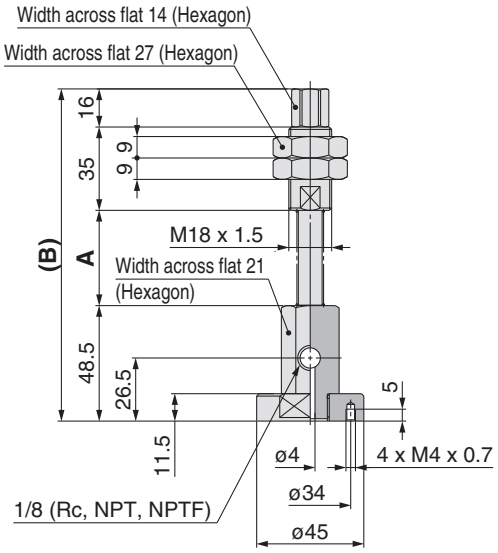

Applicable pad part no.
ZP63H□
ZP80H□
ZP63HB□
ZP80HB□

Dimensions

Model	A	B
ZPB-X2J25-□01	40	139.5
ZPB-X2J50-□01	75	174.5
ZPB-X2J75-□01	111	210.5

∗ With four M4 bolts

Buffer assembly part no.
Buffer body (Material: Aluminum alloy)
ZPB-X3J25-B01
ZPB-X3J25-N01
ZPB-X3J25-T01
ZPB-X3J50-B01
ZPB-X3J50-N01
ZPB-X3J50-T01
ZPB-X3J75-B01
ZPB-X3J75-N01
ZPB-X3J75-T01
ZPB-X3J100-B01
ZPB-X3J100-N01
ZPB-X3J100-T01

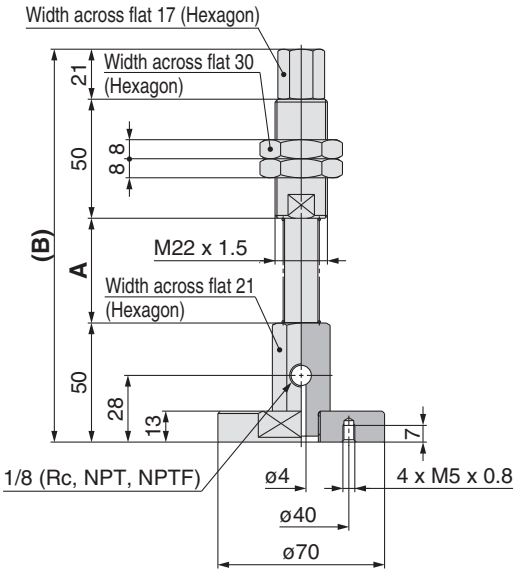

Applicable pad part no.
ZP100H□
ZP125H□
ZP100HB□
ZP125HB□

Dimensions

Model	A	B
ZPB-X3J25-□01	44	165
ZPB-X3J50-□01	80	201
ZPB-X3J75-□01	120	241
ZPB-X3J100-□01	155	276

∗ With four M5 bolts

∗ Refer to the front matter 30 for nut tightening torque.

Heavy-duty Buffer Assembly Part No. (Type X)

Buffer assembly part no.	
Buffer body (Material: Brass)	Buffer body (Material: Steel)
ZPB-X1JB25-B01	ZPB-X1JF25-B01
ZPB-X1JB25-N01	ZPB-X1JF25-N01
ZPB-X1JB25-T01	ZPB-X1JF25-T01
ZPB-X1JB50-B01	ZPB-X1JF50-B01
ZPB-X1JB50-N01	ZPB-X1JF50-N01
ZPB-X1JB50-T01	ZPB-X1JF50-T01
ZPB-X1JB75-B01	ZPB-X1JF75-B01
ZPB-X1JB75-N01	ZPB-X1JF75-N01
ZPB-X1JB75-T01	ZPB-X1JF75-T01

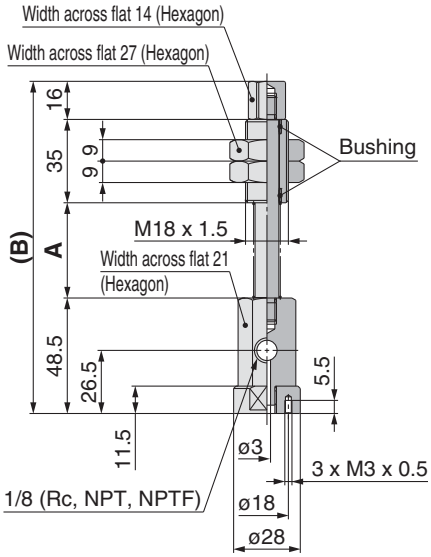

Applicable pad part no.
ZP40H□
ZP50H□
ZP40HB□
ZP50HB□

Dimensions

Model	A	B
ZPB-X1(JB/JF)25-□01	40	139.5
ZPB-X1(JB/JF)50-□01	75	174.5
ZPB-X1(JB/JF)75-□01	111	210.5

∗ With three M3 bolts

Buffer assembly part no.	
Buffer body (Material: Brass)	Buffer body (Material: Steel)
ZPB-X2JB25-B01	ZPB-X2JF25-B01
ZPB-X2JB25-N01	ZPB-X2JF25-N01
ZPB-X2JB25-T01	ZPB-X2JF25-T01
ZPB-X2JB50-B01	ZPB-X2JF50-B01
ZPB-X2JB50-N01	ZPB-X2JF50-N01
ZPB-X2JB50-T01	ZPB-X2JF50-T01
ZPB-X2JB75-B01	ZPB-X2JF75-B01
ZPB-X2JB75-N01	ZPB-X2JF75-N01
ZPB-X2JB75-T01	ZPB-X2JF75-T01

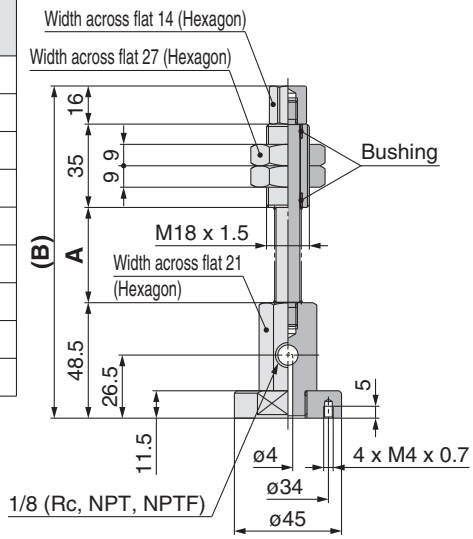

Applicable pad part no.
ZP63H□
ZP80H□
ZP63HB□
ZP80HB□

Dimensions

Model	A	B
ZPB-X2(JB/JF)25-□01	40	139.5
ZPB-X2(JB/JF)50-□01	75	174.5
ZPB-X2(JB/JF)75-□01	111	210.5

∗ With four M4 bolts

Buffer assembly part no.	
Buffer body (Material: Brass)	Buffer body (Material: Steel)
ZPB-X3JB25-B01	ZPB-X3JF25-B01
ZPB-X3JB25-N01	ZPB-X3JF25-N01
ZPB-X3JB25-T01	ZPB-X3JF25-T01
ZPB-X3JB50-B01	ZPB-X3JF50-B01
ZPB-X3JB50-N01	ZPB-X3JF50-N01
ZPB-X3JB50-T01	ZPB-X3JF50-T01
ZPB-X3JB75-B01	ZPB-X3JF75-B01
ZPB-X3JB75-N01	ZPB-X3JF75-N01
ZPB-X3JB75-T01	ZPB-X3JF75-T01
ZPB-X3JB100-B01	ZPB-X3JF100-B01
ZPB-X3JB100-N01	ZPB-X3JF100-N01
ZPB-X3JB100-T01	ZPB-X3JF100-T01

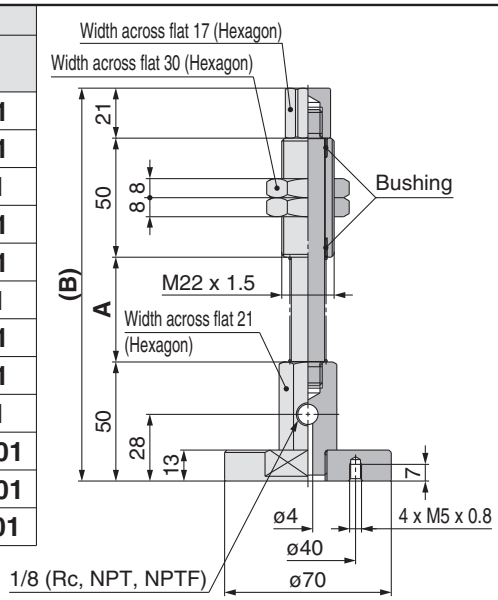

Applicable pad part no.
ZP100H□
ZP125H□
ZP100HB□
ZP125HB□

Dimensions

Model	A	B
ZPB-X3(JB/JF)25-□01	44	165
ZPB-X3(JB/JF)50-□01	80	201
ZPB-X3(JB/JF)75-□01	120	241
ZPB-X3(JB/JF)100-□01	155	276

∗ With four M5 bolts

Vacuum Equipment Precautions 1

Be sure to read this before handling.

Design/Selection

⚠ Warning

1. Confirm the specifications.

Products represented in this catalogue are designed only for use in compressed air systems (including vacuum).
Do not operate at pressures or temperatures, etc., beyond the range of specifications, as this can cause damage or malfunction. (Refer to the specifications.)
Please contact SMC when using a fluid other than compressed air (including vacuum).
We do not guarantee against any damage if the product is used outside of the specification range.

2. Safe designs should be developed, which account for the possibility of accidents resulting from a drop in vacuum pressure due to power failure or trouble with the air supply, etc.

If vacuum pressure drops and there is a loss of vacuum pad adsorption force, workpieces being carried may fall, causing human injury or damage to machinery. Sufficient safety measures should be implemented, such as drop prevention, to avoid any accidents.

3. Follow vacuum specifications for vacuum switching valves and vacuum release valves.

If non-vacuum equipment is installed in a vacuum piping, vacuum leakage will occur. Therefore, select only equipment for vacuum specifications.

4. Select an ejector which has a suitable suction flow rate.

<When there is vacuum leakage from the workpiece or the piping>
If the ejector's suction flow rate is too low, the adsorption will be poor.

<When piping is long or the diameter is large>
The adsorption response time will delay due to the increased volume of the piping.
Select an ejector with a suitable suction flow rate by referring to the technical data.

5. If the suction flow rate is too high, setting of vacuum switch will become difficult.

Setting the vacuum switch when absorbing a small (few millimeter) workpiece will sometimes become difficult, if the selected ejector has a high suction rate and there is a small pressure difference when absorbing and releasing the workpiece.

6. When two or more pads are piped to one ejector, if one pad releases its workpiece, the other pads will also release.

When one pad releases its workpiece, there is a drop in vacuum pressure which causes the other pad to release its workpiece as well.

7. Do not disassemble the product or make any modifications, including additional machining.

It may cause human injury and/or an accident.
When disassembling or assembling the product for the purpose of replacing parts, etc., be certain to follow the operation manual or catalogues.

8. Check valve

SMC can issue no guarantees regarding the maintenance of workpiece adsorption when using check valves. Take separate safety measures to prevent workpieces from dropping in the case of an electrical power outage, etc.
Please consult with SMC when using check valves as a means of preventing interference caused by the exhaust from nearby ejectors.

⚠ Caution

1. Mounting the suction filter

Because the suction of vacuum equipment acts not only on workpieces but also on dust or water droplets in the surrounding atmosphere, steps must be taken to prevent their penetration into the equipment's interior.
Even when using equipment equipped with filters, if there is a considerable amount of dust in the environment, use a separately ordered large-size filter as well.

If there is a possibility of water droplets being sucked in by the vacuum, use a drain separator for vacuum.

2. The maximum vacuum pressure of the vacuum ejector is affected by the atmospheric pressure of the operating environment.

As atmospheric pressure changes based on altitude, climate, etc., the actual maximum vacuum pressure may not reach the value listed in the specifications.

3. For information on related items, such as directional control equipment and drive equipment, refer to the caution sections in each respective catalogue.

4. Do not use the product in an environment that exposes it to vibration. If the product is used in such an environment, we can offer a lock nut type product to prevent it from loosening. Please contact SMC for model number.

Mounting

⚠ Warning

1. Operation manual

Install the products and operate them only after reading the operation manual carefully and understanding its contents. Also, keep the manual available whenever necessary.

2. Ensure sufficient space for maintenance activities.

When installing the products, allow access for maintenance.

3. Tighten threads with the proper tightening torque.

When installing the products, follow the listed torque specifications.

4. Do not obstruct the exhaust port of the ejector.

If the exhaust port is obstructed when mounted, a vacuum will not be generated. Also, do not obstruct the exhaust port with the goal of removing the workpiece. It may cause damage to the equipment.

Vacuum Equipment Precautions 2

Be sure to read this before handling.

Piping

⚠ Caution

1. **Refer to the Fittings and Tubing Precautions (Best Pneumatics No. 6) for handling one-touch fittings.**
2. **Preparation before piping**
   Before piping is connected, it should be thoroughly blown out with air (flushing) or washed to remove chips, cutting oil and other debris from inside the pipe.
3. **Wrapping of pipe tape**
   When screwing piping or fittings into ports, ensure that chips from the pipe threads or sealing material do not enter the piping. Also, if pipe tape is used, leave 1.5 to 2 thread ridges exposed at the end of the threads.

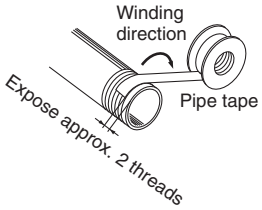

4. **Use piping with an adequate conductance.**
   Select equipment and piping for the vacuum side which has an adequate conductance so that the ejector's maximum suction flow rate can be accommodated by the piping.
   Also, make sure that there are no unnecessary restrictions or leaks, etc., along the course of the piping. Furthermore, design the air supply taking into consideration the ejector's maximum air consumption and the air consumption of other pneumatic circuits.
5. **Avoid disorganized piping.**
   Use direct piping with the shortest possible length should be used for both the vacuum and supply sides. Disorganized piping should be avoided. Unnecessary length increases the piping volume, and the response time.
6. **Use piping with a large conductance on the exhaust side of the ejector.**
   If the exhaust piping is restrictive, there will be a decline in the ejector's performance.
7. **Be certain that there are no crushed areas in the piping due to damage or bending.**

Air Supply

⚠ Warning

1. **Type of fluids**
   Please consult with SMC when using the product in applications other than compressed air.
2. **When there is a large amount of drainage.**
   Compressed air containing a large amount of drainage can cause malfunction of pneumatic equipment. An air dryer or water separator should be installed upstream from filters.

Air Supply

⚠ Warning

3. **Drain flushing**
   If condensation in the water separator and drain bowl is not emptied on a regular basis, the bowl will overflow and allow the condensation to enter the compressed air lines. It causes malfunction of pneumatic equipment.
   If the drain bowl is difficult to check and remove, installation of a drain bowl with an auto drain option is recommended.
   For compressed air quality, refer to SMC's Best Pneumatics catalogue.
4. **Use clean air.**
   Do not use compressed air that contains chemicals, synthetic oils including organic solvents, salt or corrosive gases, as it can cause damage or malfunction.

Operating Environment

⚠ Warning

1. **Do not use in an atmosphere having corrosive gases, chemicals, sea water, water, water steam, or where there is direct contact with any of these substances.**
2. **Do not use in a place subject to heavy vibration and/or shock.**
3. **Do not use in an environment where flammable gas or explosive gas exists, as it may cause fire or explosion. The products do not have an explosion proof construction.**
4. **The valve should not be exposed to prolonged sunlight. Use a protective cover.**
5. **Remove any sources of excessive heat.**
6. **In locations where there is contact with spatter from water, oil, solder, etc., take suitable protective measures.**
7. **In cases where the vacuum unit is surrounded by other equipment, or the unit is energized for an extended time, take measures to exhaust excess heat so that the temperature is within specifications.**

⚠ Caution

1. **Under certain conditions, the exhaust of the vacuum ejector may generate intermittent noises, and vacuum pressure may be uneven.**
   Using the ejector under these conditions will not result in decreased performance, but if the intermittent noise becomes a nuisance, or if there is an adverse effect on the operation of the vacuum pressure switch, try lowering or raising the supply pressure of the vacuum ejector to find a supply pressure level at which the intermittent noise ceases.

Vacuum Equipment Precautions 3

Be sure to read this before handling.

Maintenance

⚠ Warning

1. Perform maintenance inspection according to the procedures indicated in the operation manual.

If handled improperly, malfunction and damage of machinery or equipment may occur.

2. Maintenance work

If handled improperly, compressed air can be dangerous. Assembly, handling, repair and element replacement of pneumatic systems should be performed by a knowledgeable and experienced person.

3. Drain flushing

Remove drainage regularly from the water separator, air filters, vacuum drain separator, etc.

4. Removal of equipment, and supply/exhaust of compressed air

When components are removed, first confirm that measures are in place to prevent workpieces from dropping, run-away equipment, etc. Then, cut off the supply pressure and electric power, and exhaust all compressed air from the system using the residual pressure release function.

When machinery is restarted after remounting or replacement, first confirm that measures are in place to prevent lurching of actuators. Then, confirm that the equipment is operating normally.

5. Clean suction filters and silencers on a regular basis.

The performance of an ejector will deteriorate due to clogged filters and silencers. High flow filters should be used, especially in dusty locations.

SMC

⚠ Safety Instructions

These safety instructions are intended to prevent hazardous situations and/or equipment damage. These instructions indicate the level of potential hazard with the labels of **"Caution," "Warning"** or **"Danger."** They are all important notes for safety and must be followed in addition to International Standards (ISO/IEC)*1), and other safety regulations.

⚠ Caution: **Caution** indicates a hazard with a low level of risk which, if not avoided, could result in minor or moderate injury.

⚠ Warning: **Warning** indicates a hazard with a medium level of risk which, if not avoided, could result in death or serious injury.

⚠ Danger : **Danger** indicates a hazard with a high level of risk which, if not avoided, will result in death or serious injury.

*1) ISO 4414: Pneumatic fluid power – General rules relating to systems.
ISO 4413: Hydraulic fluid power – General rules relating to systems.
IEC 60204-1: Safety of machinery – Electrical equipment of machines. (Part 1: General requirements)
ISO 10218-1: Manipulating industrial robots - Safety.
etc.

⚠ Warning

1. **The compatibility of the product is the responsibility of the person who designs the equipment or decides its specifications.**
   Since the product specified here is used under various operating conditions, its compatibility with specific equipment must be decided by the person who designs the equipment or decides its specifications based on necessary analysis and test results. The expected performance and safety assurance of the equipment will be the responsibility of the person who has determined its compatibility with the product. This person should also continuously review all specifications of the product referring to its latest catalogue information, with a view to giving due consideration to any possibility of equipment failure when configuring the equipment.
2. **Only personnel with appropriate training should operate machinery and equipment.**
   The product specified here may become unsafe if handled incorrectly. The assembly, operation and maintenance of machines or equipment including our products must be performed by an operator who is appropriately trained and experienced.
3. **Do not service or attempt to remove product and machinery/equipment until safety is confirmed.**
   1. The inspection and maintenance of machinery/equipment should only be performed after measures to prevent falling or runaway of the driven objects have been confirmed.
   2. When the product is to be removed, confirm that the safety measures as mentioned above are implemented and the power from any appropriate source is cut, and read and understand the specific product precautions of all relevant products carefully.
   3. Before machinery/equipment is restarted, take measures to prevent unexpected operation and malfunction.
4. **Contact SMC beforehand and take special consideration of safety measures if the product is to be used in any of the following conditions.**
   1. Conditions and environments outside of the given specifications, or use outdoors or in a place exposed to direct sunlight.
   2. Installation on equipment in conjunction with atomic energy, railways, air navigation, space, shipping, vehicles, military, medical treatment, combustion and recreation, or equipment in contact with food and beverages, emergency stop circuits, clutch and brake circuits in press applications, safety equipment or other applications unsuitable for the standard specifications described in the product catalogue.
   3. An application which could have negative effects on people, property, or animals requiring special safety analysis.
   4. Use in an interlock circuit, which requires the provision of double interlock for possible failure by using a mechanical protective function, and periodical checks to confirm proper operation.

⚠ Caution

1. **The product is provided for use in manufacturing industries.**
   The product herein described is basically provided for peaceful use in manufacturing industries.
   If considering using the product in other industries, consult SMC beforehand and exchange specifications or a contract if necessary.
   If anything is unclear, contact your nearest sales branch.

Limited warranty and Disclaimer/ Compliance Requirements

The product used is subject to the following "Limited warranty and Disclaimer" and "Compliance Requirements".
Read and accept them before using the product.

Limited warranty and Disclaimer

1. The warranty period of the product is 1 year in service or 1.5 years after the product is delivered.*2)
   Also, the product may have specified durability, running distance or replacement parts. Please consult your nearest sales branch.
2. For any failure or damage reported within the warranty period which is clearly our responsibility, a replacement product or necessary parts will be provided.
   This limited warranty applies only to our product independently, and not to any other damage incurred due to the failure of the product.
3. Prior to using SMC products, please read and understand the warranty terms and disclaimers noted in the specified catalogue for the particular products.

*2) **Vacuum pads are excluded from this 1 year warranty.**
A vacuum pad is a consumable part, so it is warranted for a year after it is delivered.
Also, even within the warranty period, the wear of a product due to the use of the vacuum pad or failure due to the deterioration of rubber material are not covered by the limited warranty.

Compliance Requirements

1. The use of SMC products with production equipment for the manufacture of weapons of mass destruction (WMD) or any other weapon is strictly prohibited.
2. The exports of SMC products or technology from one country to another are governed by the relevant security laws and regulations of the countries involved in the transaction. Prior to the shipment of a SMC product to another country, assure that all local rules governing that export are known and followed.

⚠ Safety Instructions Be sure to read "Handling Precautions for SMC Products" (M-E03-3) before using.

SMC Corporation (Europe)

Austria	☎ +43 (0)2262622800	www.smc.at	office@smc.at
Belgium	☎ +32 (0)33551464	www.smcpneumatics.be	info@smcpneumatics.be
Bulgaria	☎ +359 (0)2807670	www.smc.bg	office@smc.bg
Croatia	☎ +385 (0)13707288	www.smc.hr	office@smc.hr
Czech Republic	☎ +420 541424611	www.smc.cz	office@smc.cz
Denmark	☎ +45 70252900	www.smcdk.com	smc@smcdk.com
Estonia	☎ +372 6510370	www.smcpneumatics.ee	smc@smcpneumatics.ee
Finland	☎ +358 207513513	www.smc.fi	smcfi@smc.fi
France	☎ +33 (0)164761000	www.smc-france.fr	promotion@smc-france.fr
Germany	☎ +49 (0)61034020	www.smc.de	info@smc.de
Greece	☎ +30 210 2717265	www.smchellas.gr	sales@smchellas.gr
Hungary	☎ +36 23511390	www.smc.hu	office@smc.hu
Ireland	☎ +353 (0)14039000	www.smcpneumatics.ie	sales@smcpneumatics.ie
Italy	☎ +39 0292711	www.smcitalia.it	mailbox@smcitalia.it
Latvia	☎ +371 67817700	www.smclv.lv	info@smclv.lv
Lithuania	☎ +370 5 2308118	www.smclt.lt	info@smclt.lt
Netherlands	☎ +31 (0)205318888	www.smcpneumatics.nl	info@smcpneumatics.nl
Norway	☎ +47 67129020	www.smc-norge.no	post@smc-norge.no
Poland	☎ +48 (0)222119616	www.smc.pl	office@smc.pl
Portugal	☎ +351 226166570	www.smc.eu	postpt@smc.smces.es
Romania	☎ +40 213205111	www.smcromania.ro	smcromania@smcromania.ro
Russia	☎ +7 8127185445	www.smc-pneumatik.ru	info@smc-pneumatik.ru
Slovakia	☎ +421 (0)413213212	www.smc.sk	office@smc.sk
Slovenia	☎ +386 (0)73885412	www.smc.si	office@smc.si
Spain	☎ +34 902184100	www.smc.eu	post@smc.smces.es
Sweden	☎ +46 (0)86031200	www.smc.nu	post@smc.nu
Switzerland	☎ +41 (0)523963131	www.smc.ch	info@smc.ch
Turkey	☎ +90 212 489 0 440	www.smcpnomatik.com.tr	info@smcpnomatik.com.tr
UK	☎ +44 (0)845 121 5122	www.smcpneumatics.co.uk	sales@smcpneumatics.co.uk

SMC CORPORATION Akihabara UDX 15F, 4-14-1, Sotokanda, Chiyoda-ku, Tokyo 101-0021, JAPAN Phone: 03-5207-8249 FAX: 03-5298-5362

1st printing QS printing QS 00 Printed in Spain

Specifications are subject to change without prior notice and any obligation on the part of the manufacturer.