Rotary Actuator

Ø 30, Ø 50, Ø 63, Ø 80, Ø 100

New

RoHS

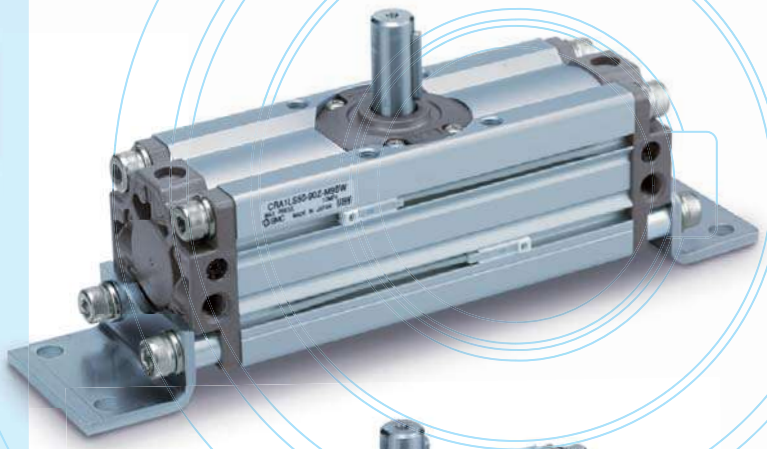

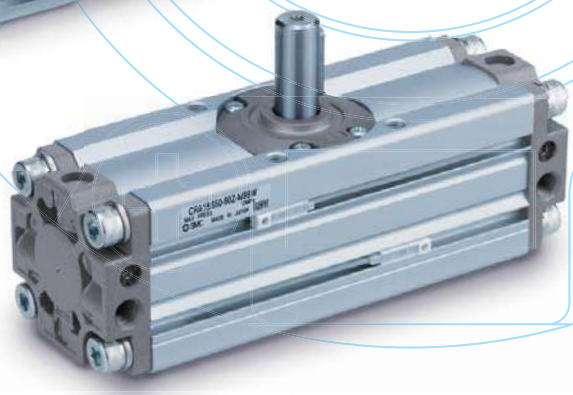

Compact auto switches are mountable. (D-M9□)

Width reduced by up to 14 mm

Space saving by changing the auto switch rail mounting to groove mounting.

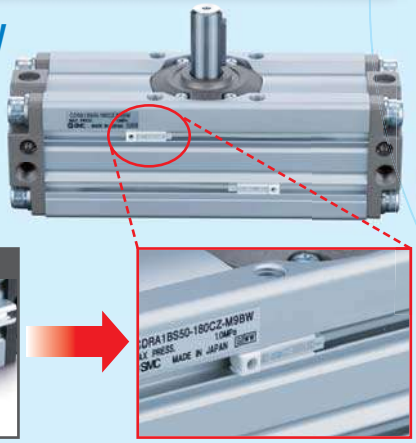

Mountable on 2 surfaces.

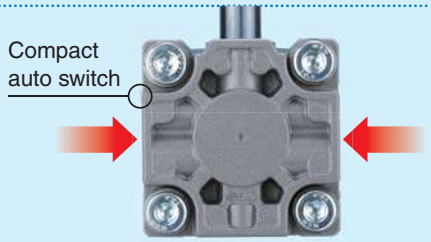

Auto switch can be mounted from the front.

- Auto switch can be mounted from the front at any position on the mounting groove.
- Auto switch can be mounted after installation or when installation condition is changed.

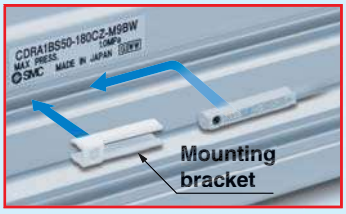

Weight is reduced by up to 14 %.

- Lightweight body by changing the body and the cover shape.

Size	CRA1 [kg]	Current model [kg]	Reduction rate [%]
30	0.27	0.3	10
50	1.3	1.5	13
63	2.2	2.5	12
80	3.9	4.3	10
100	7.3	8.5	14

Mounting interchangeable with the current model

Standard type

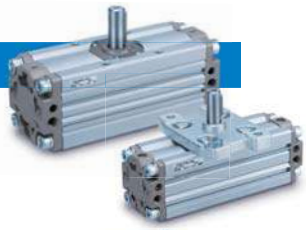

Size: 30, 50, 63, 80, 100

Rotating angle	30	90°, 180°
	50 to 100	90°, 180°, 100°, 190°

Angle adjustable type

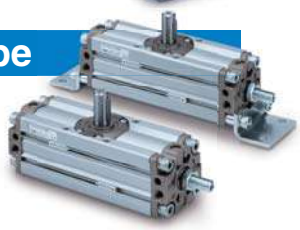

Size: 50, 63, 80, 100

Rotating angle	50 to 100	90°, 180°, 100°, 190°

Series CRA1

SMC

CAT.EUS20-232C-UK

Standard type

Cushion seal is replaceable.

Cushion seal has been made replaceable.
(Not possible for current model. Cushion seal only)

Replacement parts		
	• Slider	• Tube gasket
	• Piston seal	• Spring pin
	• Cushion seal (New)	

Rotating angle

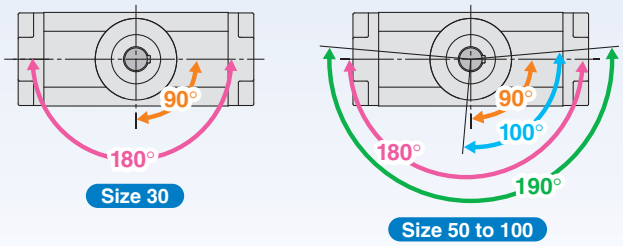

Interchangeable with current model

Exterior dimension, shaft diameter, and mounting dimension are interchangeable with current model.

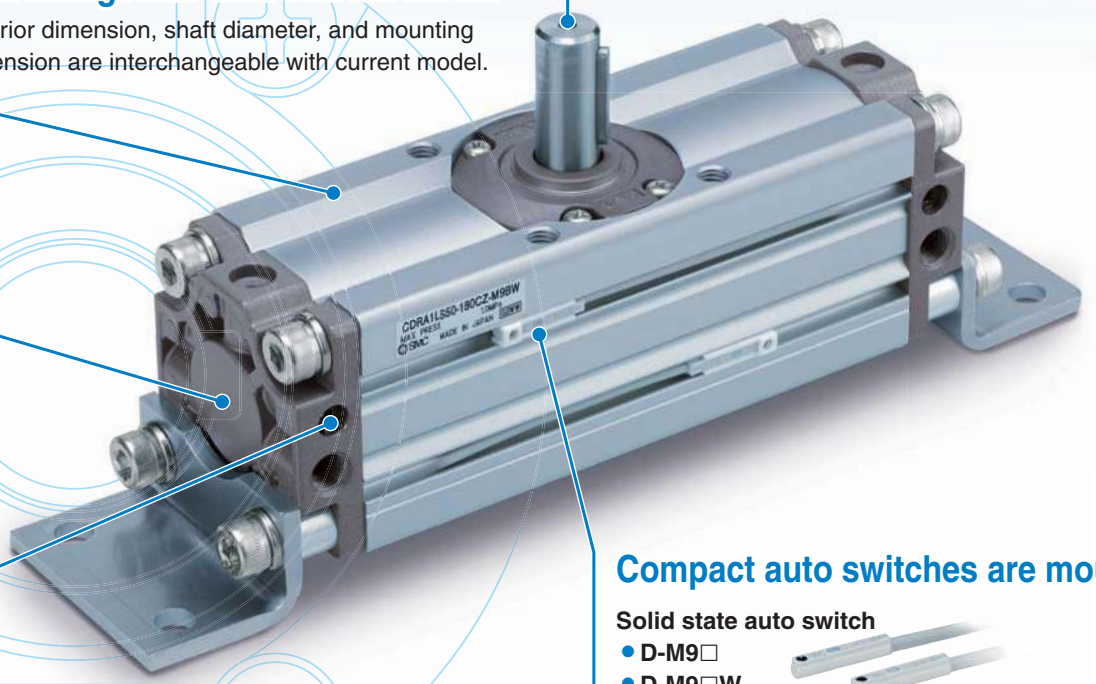

Compact auto switches are mountable.

Solid state auto switch
- **D-M9□**
- **D-M9□W**

Reed auto switch
- **D-A9□**

Easy adjustment of cushion valve

- Cushion valve shape is changed so it can be adjusted using a hexagon wrench only.
- No protrusion from the body.
- Retaining ring is used to prevent drop-out.

Port, cushion valve and auto switch are on the same surface. Easy to handle.

∗ Cushion valve cannot be mounted on the air-hydro type.

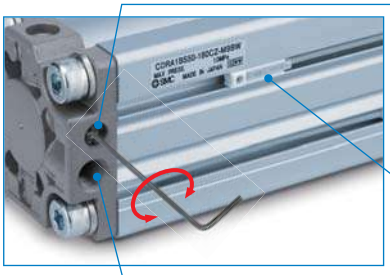

Mountable on 2 surfaces.

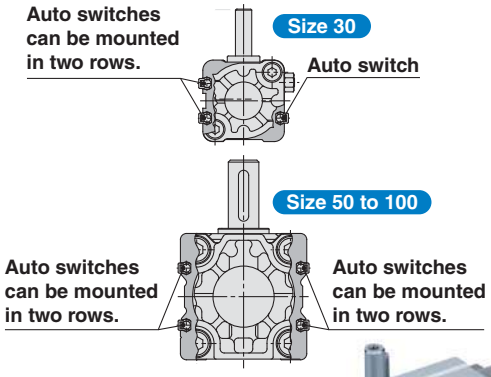

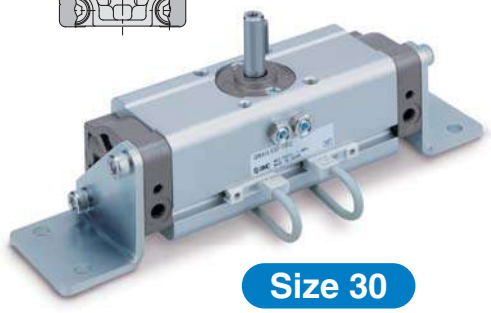

Size 30

Many variations of shaft type

Current model
Standard : 2 types
Semi-standard : 6 types

→ Series CRA1
Standard: 8 types

- Shaft type can be selected to suit the specification.
- Part number is assigned for shaft types <single round shaft, double shaft (round shaft, with four chamfers), double round shaft>.

Single shaft:
CRA1BS

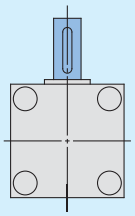

Double shaft:
CRA1BW

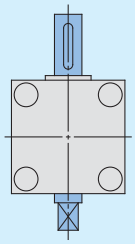

Single shaft with four chamfers:
CRA1BX

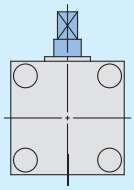

Double shaft with key:
CRA1BY

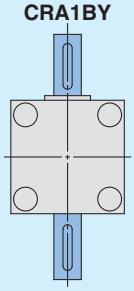

Double shaft with four chamfers:
CRA1BZ

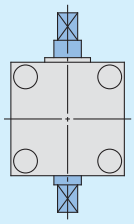

Single round shaft:
CRA1BT

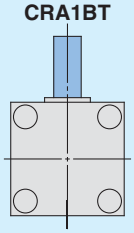

Double shaft (round shaft, with four chamfers):
CRA1BJ

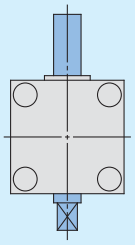

Double round shaft:
CRA1BK

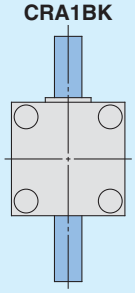

∗ Single round shaft, double shaft (round shaft, with four chamfers), double round shaft are made to order.

Mounting suitable for operating conditions is possible.

Foot bracket can be mounted at a desired position. (Foot bracket is included in the rotary actuator at shipment.)

Bottom side

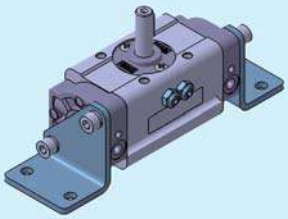

Shaft side

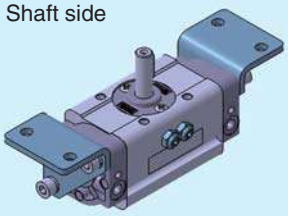

Port side

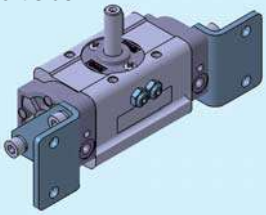

Back side

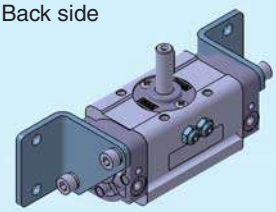

Angle adjustable type

Angle can be adjusted to a desired level in a range of up to 90°.

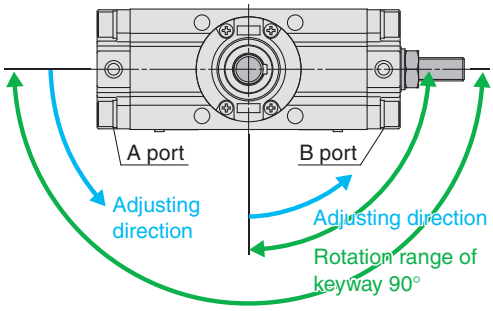

Angle can be adjusted to an appropriate level suitable for applications.

Rotary Actuator *Series CRA1* Ø 30, Ø 50, Ø 63, Ø 80, Ø 100

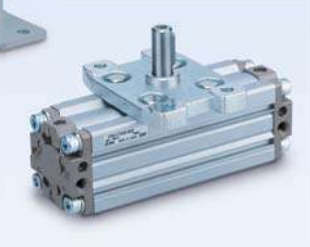

Standard type

Angle adjustable type

Series Variations

	Type			Pneumatic					Air-hydro			
	Size			30	50	63	80	100	50	63	80	100
Standard	Rotating angle	90°		●	●	●	●	●	●	●	●	●
		100°			●	●	●	●	●	●	●	●
		180°		●	●	●	●	●	●	●	●	●
		190°			●	●	●	●	●	●	●	●
	Shaft type	Single shaft	S	●	●	●	●	●	●	●	●	●
		Double shaft	W	●	●	●	●	●	●	●	●	●
		Single shaft with four chamfers	X	●	●	●	●	●	●	●	●	●
		Double shaft with key	Y	●	●	●	●	●	●	●	●	●
		Double shaft with four chamfers	Z	●	●	●	●	●	●	●	●	●
		Single round shaft	T	●	●	●	●	●	●	●	●	●
		Double shaft (round shaft, with four chamfers)	J	●	●	●	●	●	●	●	●	●
		Double round shaft	K	●	●	●	●	●	●	●	●	●
	Cushion	None		●	●	●	●	●	●	●	●	●
		Air cushion		●	●	●	●	●				
	Variations	With auto switch		●	●	●	●	●	●	●	●	●
		Angle adjustable type			●	●	●	●				
		Clean series Note)	11-	●	●							
	Mounting bracket	Flange	F		●	●	●	●	●	●	●	●
		Foot	L	●	●	●	●	●	●	●	●	●
Made to Order	Pattern	Shaft type pattern		●	●	●	●	●	●	●	●	●
		Rotation range			●	●	●	●	●	●	●	●
		Port location		●	●	●	●	●	●	●	●	●
	Stainless steel shaft/bolt/parallel key		-X 6	●	●	●	●	●				
	Operating temperature	Heat resistant 100 °C	-X 7	●	●	●	●	●				
	Both sides angle adjustable		-X10		●	●	●	●				
	One side angle adjustable, One side with cushion		-X11		●	●	●	●				
	Fluororubber seal		-X16	●	●	●	●	●				

CONTENTS

Rotary Actuator *Series CRA1*

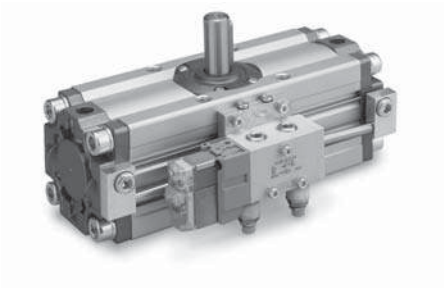

●Rotary Actuator Series CRA1

How to Order ..... Page 5
Specifications ..... Page 6
Dimensions ..... Page 7
Construction ..... Page 13

●Rotary Actuator: Angle Adjustable Type Series CRA1□□U

How to Order ..... Page 15
Specifications ..... Page 16
Dimensions ..... Page 17
Construction ..... Page 18

●Auto Switch Mounting ..... Page 19

●Simple Specials/Made to Order

Simple specials

Shaft pattern sequencing Ⅰ **-XA1** to **-XA24** ..... Page 23
Shaft pattern sequencing Ⅱ **-XA33** to **-XA59** ..... Page 27

Made to Order

How to Order ..... Page 32
①Reversed shaft **-XC7** ..... Page 33
②Change of rotation range **-XC8** to **-XC11** ..... Page 33
③Changed to fluorine grease **-XC30** ..... Page 33
④Change of rotation range and shaft rotation direction **-XC31** to **XC36** ..... Page 34
⑤Change of rotation range and angle adjusting direction **-XC37** to **XC42** ..... Page 35
⑥Change of rotation range and angle adjusting direction **-XC43** to **XC46** ..... Page 36
⑦Change of rotation range and angle adjusting direction
(Angle adjusting screw is equipped on the left.) **-XC47** to **XC52** ..... Page 37
⑧Change of rotation range and angle adjusting direction
(Angle adjusting screw is equipped on the left.) **-XC53** to **XC58** ..... Page 38
⑨Change of port location
(Mounting location of the cover is changed.) **-XC59** to **XC61** ..... Page 39
⑩One side air-hydro, One side air **-XC63**, **-XC64** ..... Page 39
⑪Stainless steel shaft/Bolt/Parallel key **-X6** ..... Page 40
⑫Heat resistant **-X7** ..... Page 40
⑬Both sides angle adjustable **-X10** ..... Page 40
⑭One side angle adjustable, One side with cushion **-X11** ..... Page 41
⑮Fluororubber seal **-X16** ..... Page 41
Made to Order/**-X6** to **-X16** ..... Page 42

Specific Product Precautions ..... Page 43

Rotary Actuator

Series CRA1

RoHS

Rack & Pinion Type/Size: 30, 50, 63, 80, 100

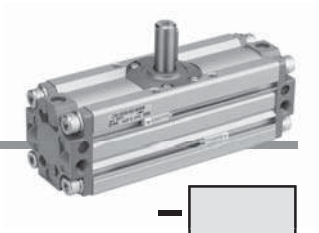

How to Order

CRA1 B S □ 50 □ – 90 □ Z – □

With auto switch CDRA1 B S □ 50 □ – 90 □ Z – M9BW □ – □

Built-in magnet

Mounting

B	Basic type
L Note 1, 2)	Foot type
F Note 3)	Flange type

Note 1) For foot bracket and part number, refer to page 6.
Note 2) Foot bracket is included in the same package, (but not assembled).
Note 3) Except size 30.

Shaft type

S	Single shaft
W	Double shaft
X	Single shaft with four chamfers
Y	Double shaft with key
Z	Double shaft with four chamfers
T	Single round shaft
J	Double shaft (round shaft, with four chamfers)
K	Double round shaft

Note 1) Flange type is not available for T, J, K.
Note 2) T, J, K are made to order.

Size

30
50
63
80
100

Type

—	Pneumatic
H Note)	Air-hydro

Note) Except size 30. Refer to page 43 for handling precautions.

Port type

Size		30	50	63	80	100
—	M thread	M5	—	—	—	—
	Rc	—	1/8	1/8	1/4	3/8
TF	G	—				
TN	NPT	—				
TT	NPTF	—				

Rotating angle

90	90°
180	180°
100 Note)	100°
190 Note)	190°

Note) Except size 30

Air cushion

—	None
C Note)	With air cushion

Note) Except air-hydro type.

Number of auto switches

—	2 pcs.
S	1 pc.

Note) Up to two auto switches are mountable.

Auto switch

—	Without auto switch (Built-in magnet)

Note) For applicable auto switch model, refer to the table below.

Made to Order
Refer to page 6.

Applicable Auto Switches/Refer to the **WEB catalogue** or the Auto Switch Guide for further information on auto switches.

Type	Special function	Electrical entry	Indicator light	Wiring (Output)	Load voltage DC		Load voltage AC	Auto switch model Perpendicular	Auto switch model In-line	Lead wire length [m] 0.5 (—)	1 (M)	3 (L)	5 (Z)	Pre-wired connector	Applicable load	
Solid state auto switch	—	Grommet	Yes	3-wire (NPN)	24 V	5 V, 12 V	—	M9NV	M9N	●	●	●	○	○	IC circuit	Relay, PLC
				3-wire (PNP)				M9PV	M9P	●	●	●	○	○		
				2-wire		12 V		M9BV	M9B	●	●	●	○	○	—	
	Diagnosis indication (2-color indication)			3-wire (NPN)		5 V, 12 V		M9NWV	M9NW	●	●	●	○	○	IC circuit	
				3-wire (PNP)				M9PWV	M9PW	●	●	●	○	○		
				2-wire		12 V		M9BWV	M9BW	●	●	●	○	○	—	
	Water resistant (2-color indication)			3-wire (NPN)		5 V, 12 V		M9NAV*1	M9NA*1	○	○	●	○	○	IC circuit	
				3-wire (PNP)				M9PAV*1	M9PA*1	○	○	●	○	○		
				2-wire		12 V		M9BAV*1	M9BA*1	○	○	●	○	○	—	
Reed auto switch	—	Grommet	Yes	3-wire (NPN equivalent)	—	5 V	—	A96V	A96	●	—	●	—	—	IC circuit	—
			No	2-wire	24 V	12 V	100 V	A93V*2	A93	●	●	●	●	—	—	Relay, PLC
							100 V or less	A90V	A90	●	—	●	—	—	IC circuit	

*1 Although it is possible to mount water resistant type auto switches, note that the rotary actuator itself is not of water resistant construction.
*2 1 m type lead wire is only applicable to D-A93.

* Lead wire length symbols: 0.5 m ····· — (Example) M9NW
1 m ····· M (Example) M9NWM
3 m ····· L (Example) M9NWL
5 m ····· Z (Example) M9NWZ

* Auto switches marked with "○" are produced upon receipt of order.
* Auto switches are shipped together, (but not assembled).

Made to Order Refer to the **WEB catalogue** or the Auto Switch Guide for detailed solid state auto switches with pre-wired connectors.

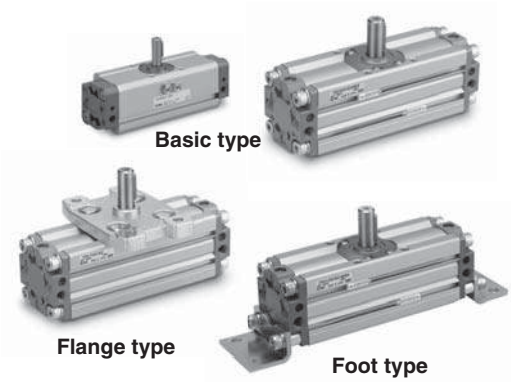

Symbol

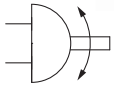

Made to Order

Made to Order
(For details, refer to pages 22 to 42.)

Symbol	Description	Applicable shaft type
-XA1 to -XA24	Shaft pattern sequencing Ⅰ	S, W, Y
-XA33 to -XA59	Shaft pattern sequencing Ⅱ	X, Z, T, J, K
-XC7	Reversed shaft	S, W, X, T, J
-XC8 to -XC11	Change of rotation range	S, W, Y
-XC30	Changed to fluorine grease	S, W, X, Y, Z, T, J, K
-XC31 to -XC36	Change of rotation range and shaft rotation direction	S, W, Y
-XC59 to -XC61	Change of port direction	S, W, X, Y, Z, T, J, K
-XC63, -XC64	One side air-hydro, One side air	S, W, X, Y, Z, T, J, K
-X6	Stainless steel shaft/ bolt, etc.	S, W, X, Y, Z, T, J, K
-X7*	Heat resistant (100 °C)	S, W, X, Y, Z, T, J, K
-X16	Fluororubber seal	S, W, X, Y, Z, T, J, K

∗ X7: Not available for the built-in magnet type

Rotation Range of Keyway

The shaft rotates clockwise when the pressure is applied from the A port while it rotates counterclockwise when the pressure is applied from the B port.

Size: 30

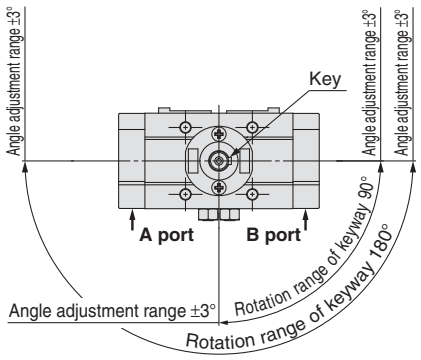

Size: 50 to 100

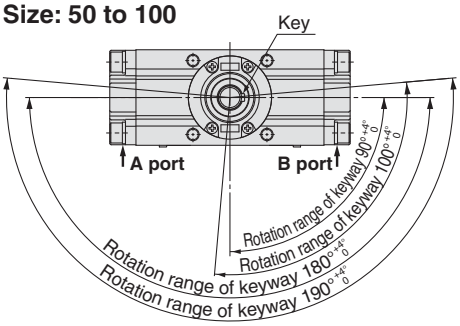

Specifications

Type	Pneumatic					Air-hydro			
Size	30	50	63	80	100	50	63	80	100
Fluid	Air (Non-lube)					Turbine oil			
Max. operating pressure	1.0 MPa								
Min. operating pressure	0.1 MPa								
Ambient and fluid temperature	0 to 60 °C (No freezing)								
Cushion	Not attached, Air cushion					None			
Backlash	None*	Within 1°							
Tolerance in rotating angle	—	0 to +4°							

∗ Since the CRA1□30 has a stopper installed, there is no backlash produced under pressure.

Effective Torque

[N·m]

Size	Operating pressure [MPa]									
	0.1	0.2	0.3	0.4	0.5	0.6	0.7	0.8	0.9	1.0
30	0.38	0.76	1.14	1.53	1.91	2.29	2.67	3.05	3.44	3.82
50	1.85	3.71	5.57	7.43	9.27	11.2	13.0	14.9	16.7	18.5
63	3.44	6.88	10.4	13.8	17.2	20.6	24.0	27.5	31.0	34.4
80	6.34	12.7	19.0	25.3	31.7	38.0	44.4	50.7	57.0	63.4
100	14.9	29.7	44.6	59.4	74.3	89.1	104	119	133	149

Allowable Kinetic Energy/Adjustable Range of Rotation Time Safe in Operation

Size	Allowable kinetic energy [J]			Adjustable range of rotation time safe in operation [s/90°]
	Without air cushion	With air cushion*		
30	0.01	0.12	Cushion angle 35°	0.2 to 1
50	0.05	0.98		0.2 to 2
63	0.12	1.50		0.2 to 3
80	0.16	2.00		0.2 to 4
100	0.54	2.90		0.2 to 5

∗ Allowable kinetic energy of the product with air cushion is the maximum absorbed energy when the cushion valve adjustment is optimised.

Weight

[kg]

Size	Standard weight		Additional weight		
	90°	180°	With auto switch*	Foot bracket	Flange bracket
30	0.27	0.36	0.1	0.1	—
50	1.3	1.5	0.2	0.3	0.5
63	2.2	2.6	0.4	0.5	0.9
80	3.9	4.4	0.6	0.9	1.5
100	7.3	8.3	0.9	1.2	2.0

∗ With 2 auto switches

Foot Bracket/Part No.

Size	Foot bracket	Contents	Mounting screw size included in foot bracket
30	CRA1L30-Y-1Z	Foot bracket : 2 pcs. Mounting screw: 4 pcs. Collar* : 4 pcs.	M5 x 0.8 x 25
50	CRA1L50-Y-1Z		M8 x 1.25 x 35
63	CRA1L63-Y-1Z		M10 x 1.5 x 40
80	CRA1L80-Y-1Z		M12 x 1.75 x 50
100	CRA1L100-Y-1Z		M12 x 1.75 x 50

∗ Size 30 does not include collars.
∗ Remove the basic type mounting screws and use the mounting screws included in the foot bracket to secure the foot bracket to the cover. Use the collar as a spacer for the cover counterbore part and secure it together with the foot.
∗ For size 30, be careful not to drop the cover when removing the basic type mounting screws. Additionally, do not mount the foot bracket with the pressure applied to the port.

Dimensions/Basic Type: C□RA1B□

Size: 30

Single shaft: C□RA1BS

Double shaft: C□RA1BW

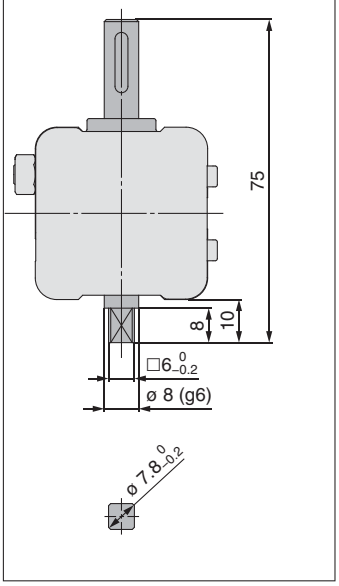

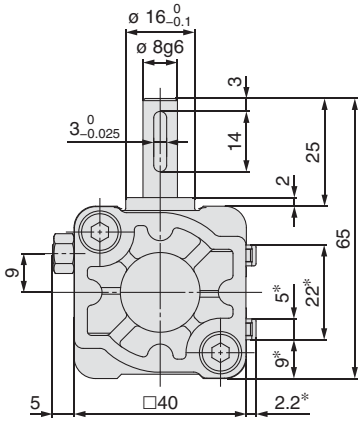

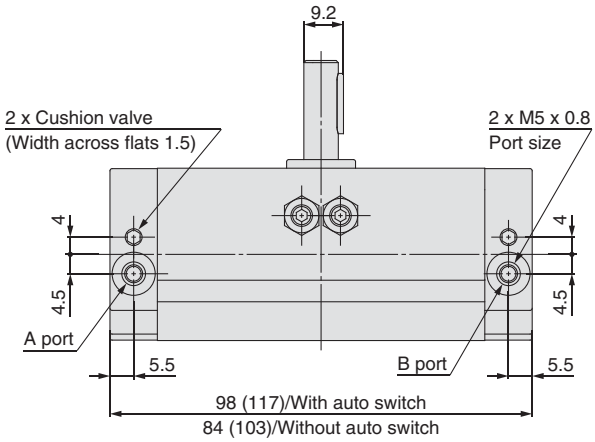

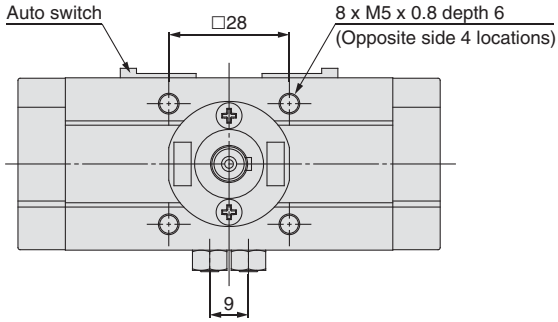

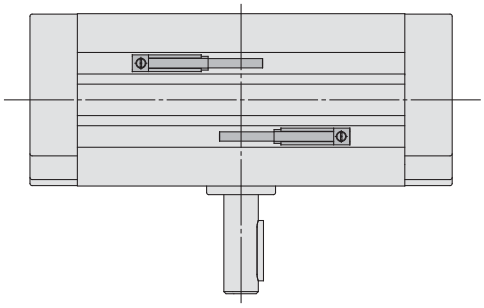

- Drawing shows the appearance for rotation of 90°.
- Dimensions show pressurisation to B port.
- Drawing shows that the auto switch is mounted on the side opposite to the port side. (Dimensions with an asterisk mark (*) are not required for actuators without the auto switch.)

∗ ( ) are the dimensions for rotation of 180°.

Note) A parallel key is included in the same package, (but not assembled).

Dimensions/Basic Type: C□RA1B□

Size: 50/63/80/100
Single shaft: C□RA1BS

Double shaft: C□RA1BW

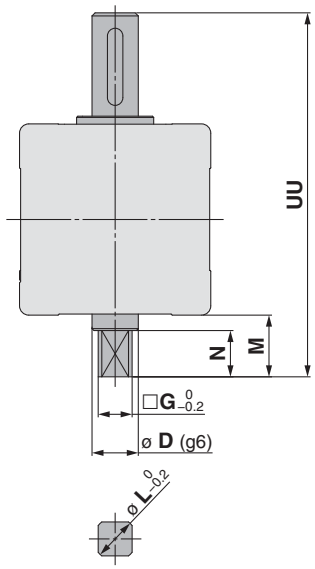

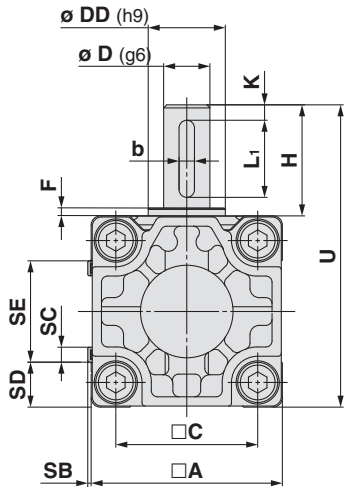

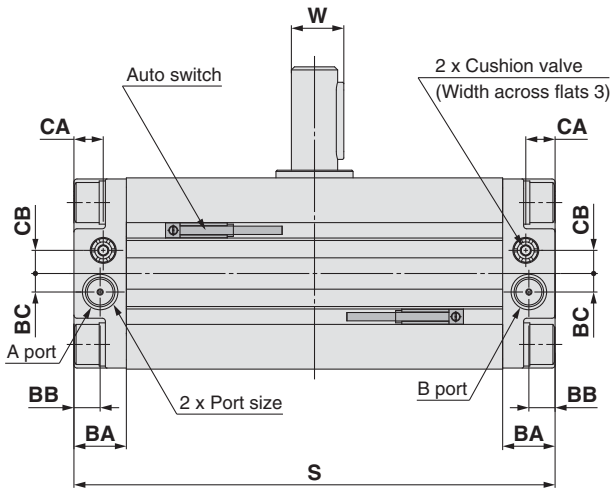

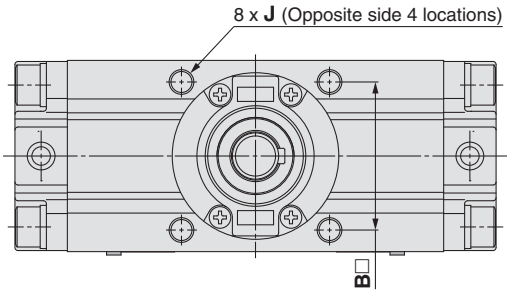

Ø D is the shaft dimension.
Note) Other dimensions are the same as the single shaft type.

[mm]

Size	D (g6)	G	M	N	UU	L
50	15	11	20	15	118	14
63	17	13	22	17	139	16
80	20	15	25	20	167	19
100	25	19	30	25	202	24

- Drawing shows the appearance for rotation of 90° and 100°.
- Dimensions show pressurization to B port.
- Drawing shows the auto switch mounted on the port side.

∗ ( ) are the dimensions for rotation of 180° and 190°.

[mm]

Size	Port size	A	B	C	D (g6)	DD (h9)	F	H	J	K	With auto switch					Without auto switch	U	W	BA	BB	BC	★ CA	★ CB	Key dimensions Note)	
											S	SB	SC	SD	SE	S								b	L1
50	1/8	62	48	46	15	25	2.5	36	M8 x 1.25 depth 8	5	156 (189)	1.5	5	14.5	33	144 (177)	98	17	17	8.5	6	9.5	7.5	$5^{0}_{-0.030}$	25
63	1/8	76	60	57	17	30	2.5	41	M10 x 1.5 depth 12	5	175 (213.5)	1.5	5	21.5	33	163 (201.5)	117	19.5	20	10	7	11	8	$6^{0}_{-0.030}$	30
80	1/4	92	72	70	20	35	3	50	M12 x 1.75 depth 13	5	199 (243)	1.5	5	29.5	33	186 (230)	142	22.5	23.5	12	8	13	9	$6^{0}_{-0.030}$	40
100	3/8	112	85	85	25	40	4	60	M12 x 1.75 depth 14	5	259 (325)	1.5	5	39.5	33	245 (311)	172	28	25	12.5	8	14	10	$8^{0}_{-0.036}$	45

Note) A parallel key is included in the same package, (but not assembled).

Dimensions/Basic Type: C□RA1B□

Size: 30/50/63/80/100

Single shaft with four chamfers: C□RA1BX

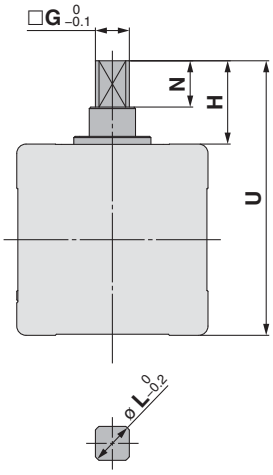

Note) Other dimensions are the same as the single shaft type. [mm]

Size	G	H	N	U	L
30	6	13	8	53	7.8
50	11	27	15	89	14
63	13	29	17	105	16
80	15	38	20	130	19
100	19	44	25	156	24

Double shaft with key: C□RA1BY

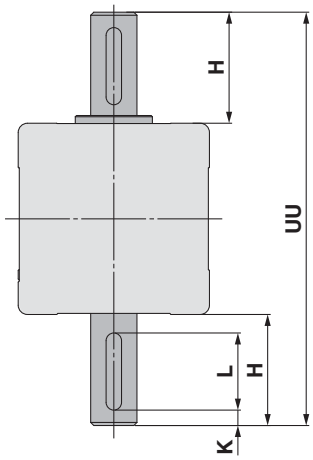

Note) Other dimensions are the same as the single shaft type. [mm]

Size	H	K	UU	L
30	25	3	90	14
50	36	5	134	25
63	41	5	158	30
80	50	5	192	40
100	60	5	232	45

Double shaft with four chamfers: C□RA1BZ

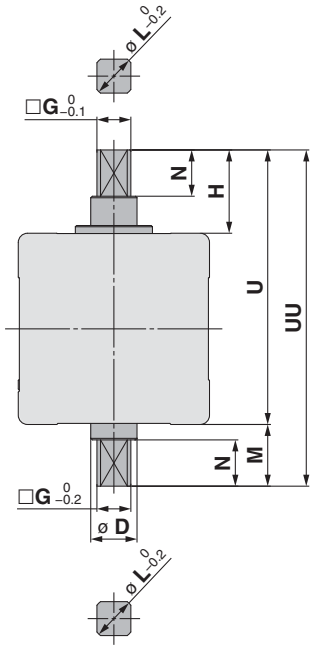

Note) Other dimensions are the same as the single shaft type. [mm]

Size	D (g6)	G	H	M	N	U	UU	L
30	8	6	13	10	8	53	63	7.8
50	15	11	27	20	15	89	109	14
63	17	13	29	22	17	105	127	16
80	20	15	38	25	20	130	155	19
100	25	19	44	30	25	156	186	24

Single round shaft: C□RA1BT

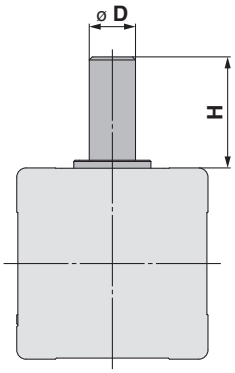

Note) Other dimensions are the same as the single shaft type. [mm]

Size	D (g6)	H
30	8	25
50	15	36
63	17	41
80	20	50
100	25	60

Double shaft (round shaft, with four chamfers): C□RA1BJ

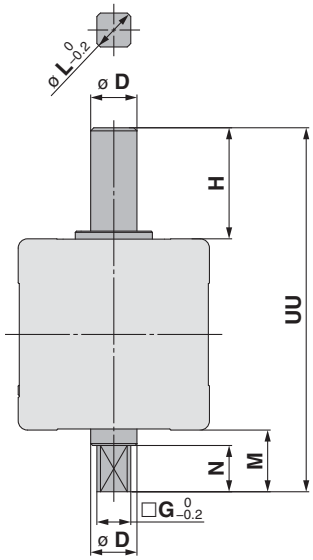

Note) Other dimensions are the same as the single shaft type. [mm]

Size	D (g6)	G	H	M	N	UU	L
30	8	6	25	10	8	75	7.8
50	15	11	36	20	15	118	14
63	17	13	41	22	17	139	16
80	20	15	50	25	20	167	19
100	25	19	60	30	25	202	24

Double round shaft: C□RA1BK

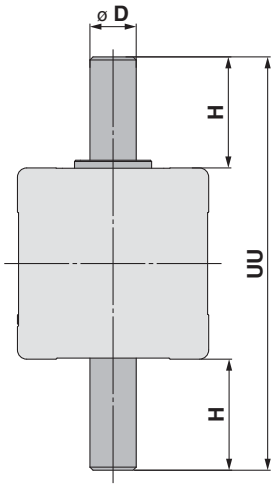

Note) Other dimensions are the same as the single shaft type. [mm]

Size	D (g6)	H	UU
30	8	25	90
50	15	36	134
63	17	41	158
80	20	50	192
100	25	60	232

Dimensions/Foot Type: C□RA1L□

Size: 30

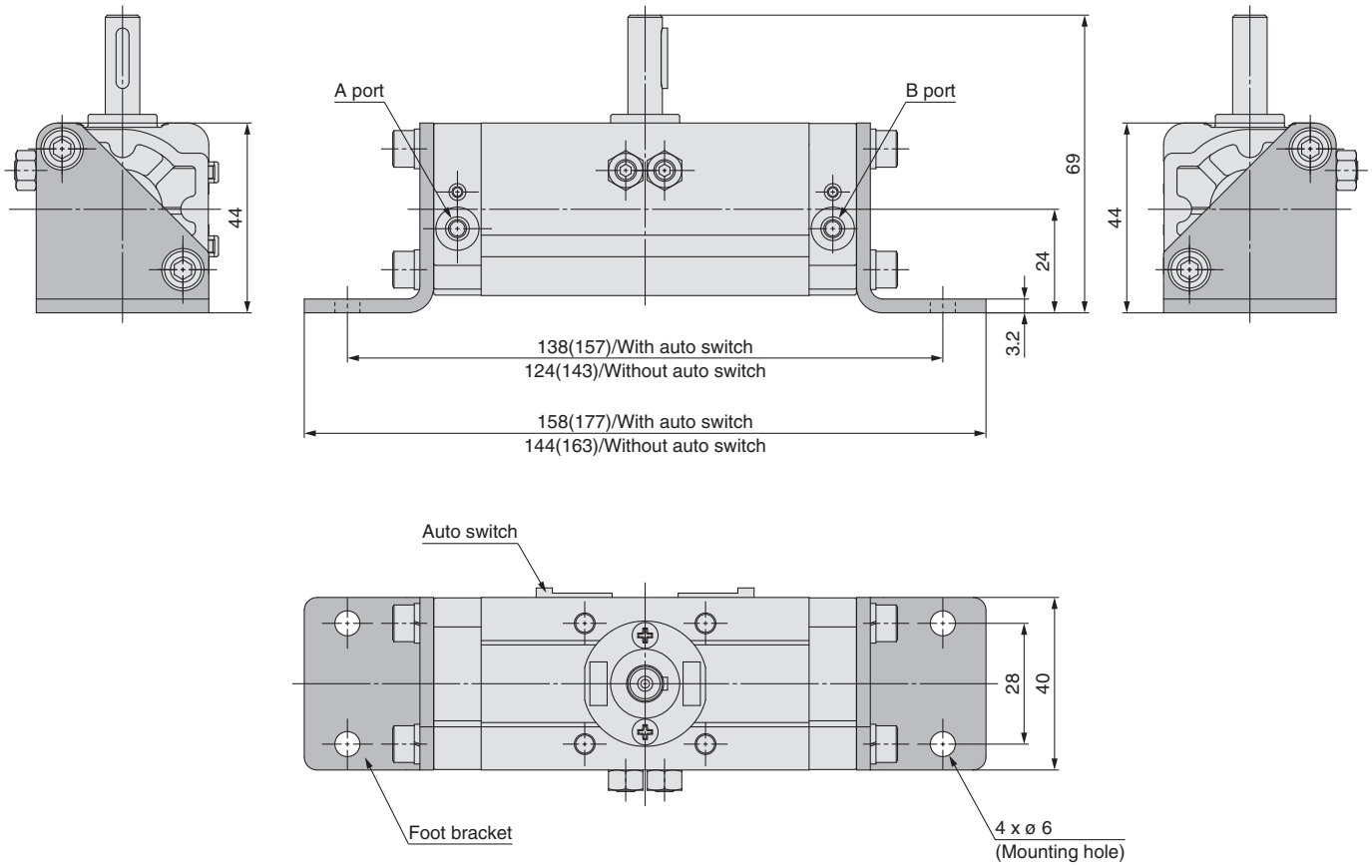

- Drawing shows the appearance for rotation of 90°.
- Dimensions show pressurisation to B port.
- Drawing shows that the auto switch is mounted on the side opposite to the port side.

∗ ( ) are the dimensions for rotation of 180°.

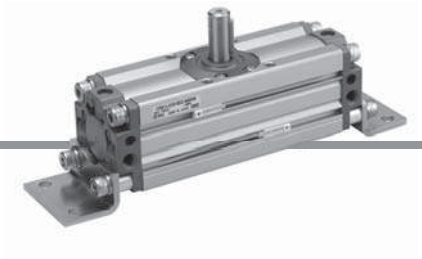

Dimensions/Foot Type: C□RA1L□

Size: 50/63/80/100

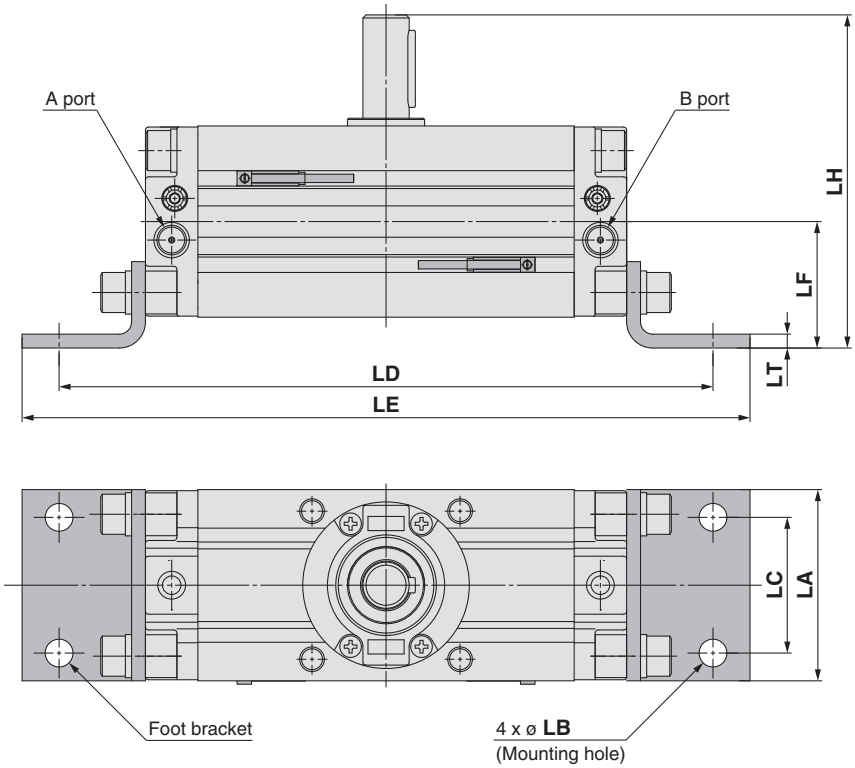

- Drawing shows the appearance for rotation of 90° and 100°.
- Dimensions show pressurisation to B port.
- Drawing shows that the auto switch mounted on the port side.

∗ ( ) are the dimensions for rotation of 180° and 190°.

Note) Other dimensions are the same as the basic type. [mm]

Size	LA	LB	LC	With auto switch		Without auto switch		LF	LH	LT
				LD	LE	LD	LE			
50	62	9	44	212 (245)	236 (269)	200 (233)	224 (257)	41	108	4.5
63	76	11	55	247 (285.5)	275 (313.5)	235 (273.5)	263 (301.5)	48	127	5
80	92	13	67	287 (331)	329 (373)	274 (318)	316 (360)	58	154	6
100	112	13	87	347 (413)	389 (455)	333 (399)	375 (441)	73.5	189.5	6

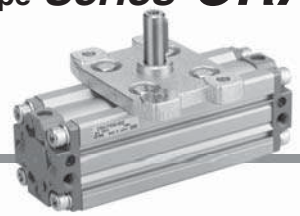

Dimensions/Flange Type: C□RA1F□

Size: 50/63/80/100

Single shaft: C□RA1FS

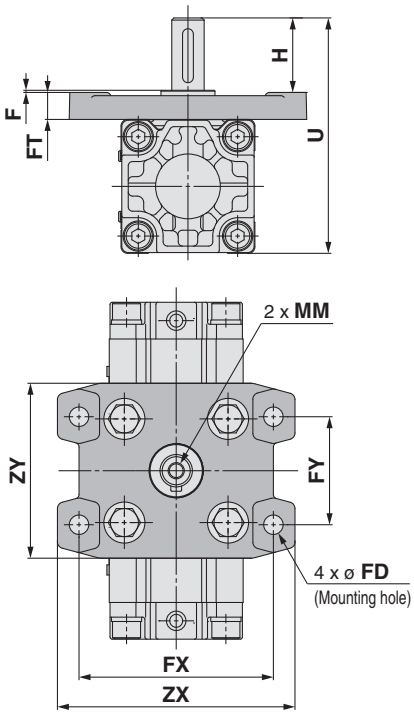

Note) Other dimensions are the same as the basic type.
[mm]

Size	F	H	MM	U	FD
50	4	39	M6 x 1.0 depth 12	114	9
63	5	45	M6 x 1.0 depth 12	136	11.5
80	5	55	M8 x 1.25 depth 16	165	13.5
100	5	60	M10 x 1.5 depth 20	190	13.5

Size	FT	FX	FY	ZX	ZY
50	13	90	50	110	81
63	15	105	59	130	101
80	18	130	76	160	119
100	18	150	92	180	133

Double shaft: C□RA1FW

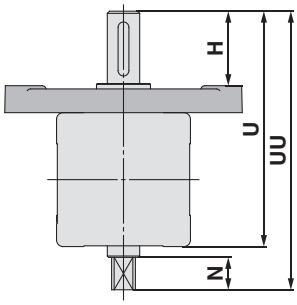

Note) Other dimensions are the same as the single shaft type. [mm]

Size	H	N	U	UU
50	39	15	114	134
63	45	17	136	158
80	55	20	165	190
100	60	25	190	220

Single shaft with four chamfers: C□RA1FX

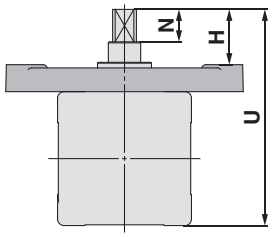

Note) Other dimensions are the same as the single shaft type. [mm]

Size	H	N	U
50	30	15	105
63	33	17	124
80	43	20	153
100	44	25	174

Double shaft with key: C□RA1FY

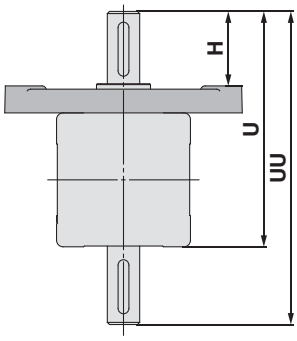

Note) Other dimensions are the same as the single shaft type. [mm]

Size	H	U	UU
50	39	114	150
63	45	136	177
80	55	165	215
100	60	190	250

Double shaft with four chamfers: C□RA1FZ

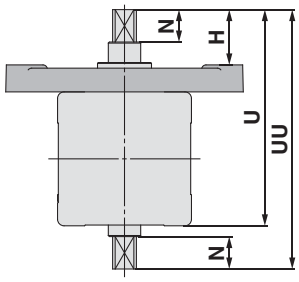

Note) Other dimensions are the same as the single shaft type. [mm]

Size	H	N	U	UU
50	30	15	105	125
63	33	17	124	146
80	43	20	153	178
100	44	25	174	204

The dimensions of shaft key and four chamfers are the same as the basic type. For details, refer to page 9.

Construction: Size 30

Without air cushion

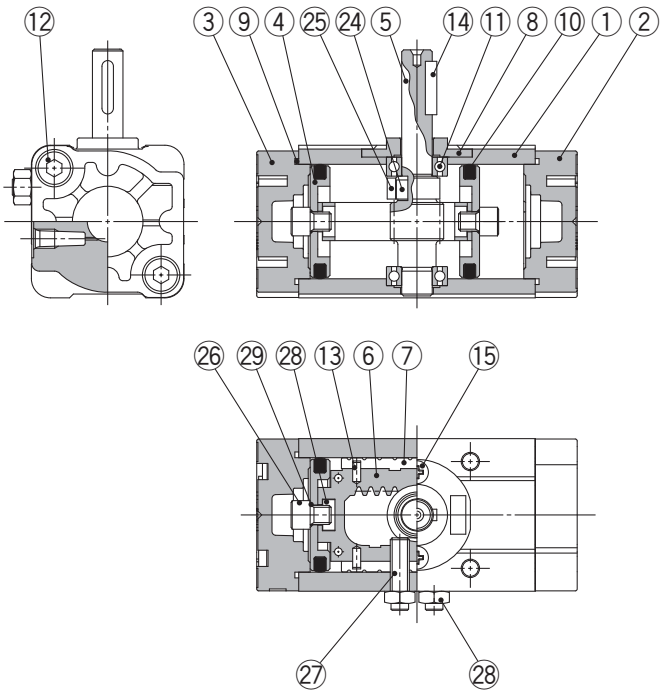

With air cushion

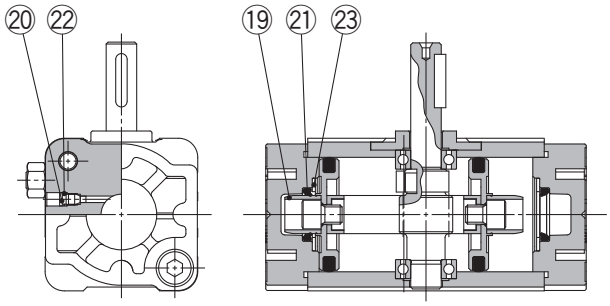

Without air cushion With auto switch

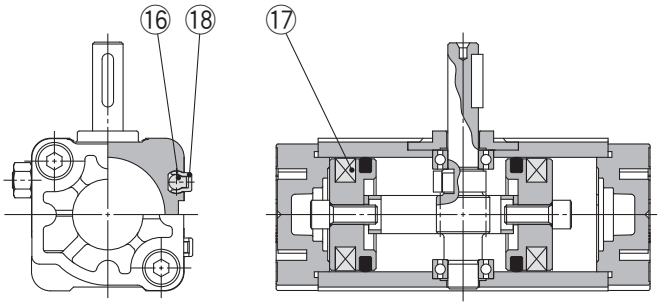

Component Parts

No.	Description	Material	Note
1	**Body**	Aluminium alloy	Anodised
2	**Right cover**	Aluminium alloy	Metallic coating
3	**Left cover**	Aluminium alloy	Metallic coating
4	**Piston**	Aluminium alloy	
5	**Shaft**	Alloy steel	
6	**Rack**	Carbon steel	Nitrided
7	**Slider**	Resin	
8	**Bearing retainer**	Zinc alloy	Chromated
9	**Tube gasket**	NBR	
10	**Piston seal**	NBR	
11	**Bearing**	High carbon chrome bearing steel	
12	Hexagon socket head cap screw with washer	Alloy steel	Zinc chromated
13	**Spring pin**	Steel	Zinc chromated
14	**Parallel key**	Carbon steel	
15	Cross-recessed pan head tapping screw	Steel	Zinc chromated
16	**Auto switch**	—	
17	**Magnet**	—	
18	**Switch spacer**	Resin	
19	**Cushion ring**	Aluminium alloy	Anodised
20	**Cushion valve**	Steel	Nickel plated
21	**Cushion seal**	Urethane	
22	**O-ring**	NBR	
23	**Seal retainer**	Steel	
24	**Parallel key**	Carbon steel	
25	**Stopper**	Alloy steel	
26	**Piston holding bolt**	Alloy steel	Zinc chromated
27	**Hexagon socket head set screw**	Alloy steel	Zinc chromated
28	**Hexagon nut**	Steel	Zinc chromated
29	**O-ring**	NBR	

Replacement Parts

Size		Part no.		
		Without air cushion	With air cushion	Air-hydro
Note 2) **30**	**90°**	P694010-20	P694010-22	—
	180°	P694010-21	P694010-23	—
Corresponding parts		⑦, ⑨, ⑩, ⑬ are included as a set.	⑦, ⑨, ⑩, ⑬, ㉑ are included as a set.	—

Note 1) When ordering replacement parts, write "1" for one set of the parts per actuator.
Note 2) Replacement parts for different rotation angles are set.
A grease pack (10 g) is included.
If an additional grease pack is needed, order with the following part number.
Grease pack part number: GR-S-010 (10 g)

Construction: Size 50 to 100

Without air cushion

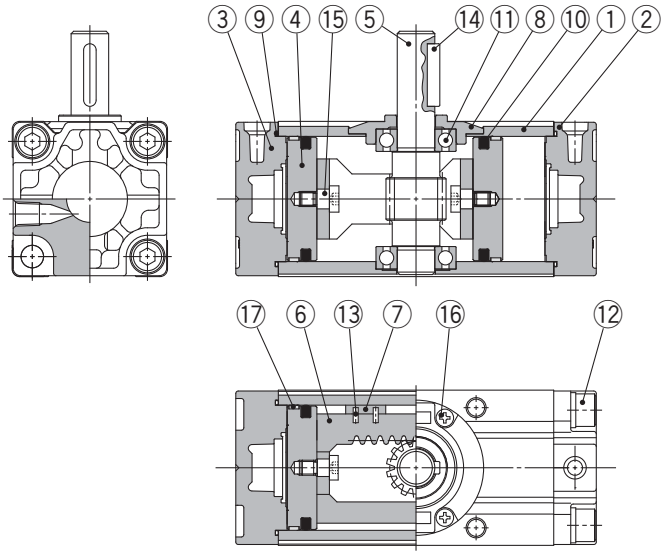

With air cushion

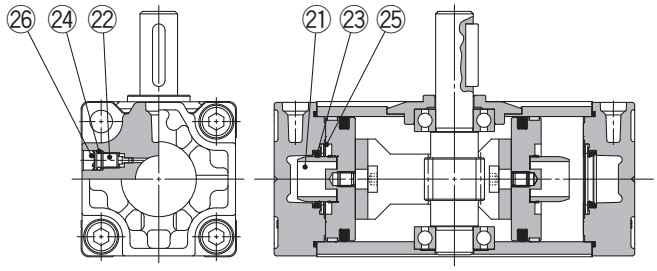

Without air cushion With auto switch

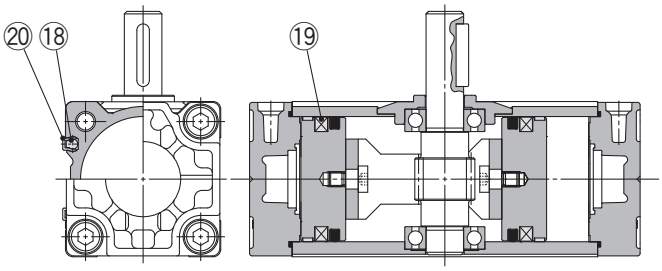

Component Parts

No.	Description	Material	Note
1	**Body**	Aluminium alloy	Anodised
2	**Right cover**	Aluminium alloy	Metallic coating
3	**Left cover**	Aluminium alloy	Metallic coating
4	**Piston**	Aluminium alloy	
5	**Shaft**	Alloy steel	
6	**Rack**	Carbon steel	Nitrided
7	**Slider**	Resin	
8	**Bearing retainer**	Aluminium alloy	Chromated
9	**Tube gasket**	NBR	
10	**Piston seal**	NBR	
11	**Bearing**	High carbon chrome bearing steel	
12	Hexagon socket head cap screw with washer	Alloy steel	Zinc chromated
13	**Spring pin**	Steel	Zinc chromated
14	**Parallel key**	Carbon steel	
15	**Connecting screw**	Carbon steel	Zinc chromated
16	Cross-recessed pan head tapping screw	Steel	Zinc chromated
17	**Wear ring**	Resin	
18	**Auto switch**	—	
19	**Magnet**	—	
20	**Switch spacer**	Resin	
21	**Cushion ring**	Aluminium alloy	Anodised
22	**Cushion valve**	Steel	Zinc chromated
23	**Cushion seal**	Urethane	
24	**O-ring**	NBR	
25	**Seal retainer**	Steel	
26	**Retaining ring**	Steel	

Replacement Parts

Size	Part no.		
	Without air cushion	With air cushion	Air-hydro
50	P694020-20	P694020-21	P694020-23
63	P694030-20	P694030-21	P694030-23
80	P694040-20	P694040-21	P694040-23
100	P694050-20	P694050-21	P694050-23
Corresponding parts	⑦, ⑨, ⑩, ⑬ are included as a set.	⑦, ⑨, ⑩, ⑬, ㉓ are included as a set.	⑦, ⑨, ⑩, ⑬ are included as a set.

Note) When ordering replacement parts, write "1" for one set of the parts per actuator.
A grease pack (10 g) is included.
If an additional grease pack is needed, order with the following part number.
Grease pack part number: GR-S-010 (10 g)

Rotary Actuator: Angle Adjustable Type

(Angle adjustment mechanism is provided as standard.)

Series CRA1□□U

RoHS

Rack & Pinion Type/Size: 50, 63, 80, 100

How to Order

CRA1 B S U 50 □ – 90 Z – □

With auto switch CDRA1 B S U 50 □ – 90 Z – M9BW □ – □

Built-in magnet

Mounting

B	Basic type
L Note 1, 2)	Foot type
F	Flange type

Note 1) For foot bracket and part number, refer to page 16.
Note 2) Foot bracket is included in the same package, (but not assembled).

Shaft type

S	Single shaft
W	Double shaft
X	Single shaft with four chamfers
Y	Double shaft with key
Z	Double shaft with four chamfers
T	Single round shaft
J	Double shaft (round shaft, with four chamfers)
K	Double round shaft

∗ Flange type is not available for T, J, K.
∗ T, J, K are made to order.

Angle adjustable type

Size

50
63
80
100

Port type

Size		50	63	80	100
—	Rc	1/8		1/4	3/8
TF	G				
TN	NPT				
TT	NPTF				

Rotating angle

90	90°
180	180°
100	100°
190	190°

Auto switch

—	Without auto switch (Built-in magnet)

∗ For applicable auto switch model, refer to the table below.

Number of auto switches

—	2 pcs.
S	1 pc.

Note) Up to two auto switches are mountable.

Made to Order
Refer to page 16.

Applicable Auto Switches/Refer to the **WEB catalogue** or the Auto Switch Guide for further information on auto switches.

Type	Special function	Electrical entry	Indicator light	Wiring (Output)	Load voltage DC		Load voltage AC	Auto switch model Perpendicular	Auto switch model In-line	Lead wire length [m] 0.5 (—)	1 (M)	3 (L)	5 (Z)	Pre-wired connector	Applicable load	
Solid state auto switch	—	Grommet	Yes	3-wire (NPN)	24 V	5 V, 12 V	—	M9NV	M9N	●	●	●	○	○	IC circuit	Relay, PLC
				3-wire (PNP)				M9PV	M9P	●	●	●	○	○		
				2-wire		12 V		M9BV	M9B	●	●	●	○	○	—	
	Diagnosis indication (2-color indication)			3-wire (NPN)		5 V, 12 V		M9NWV	M9NW	●	●	●	○	○	IC circuit	
				3-wire (PNP)				M9PWV	M9PW	●	●	●	○	○		
				2-wire		12 V		M9BWV	M9BW	●	●	●	○	○	—	
	Water resistant (2-color indication)			3-wire (NPN)		5 V, 12 V		M9NAV∗1	M9NA∗1	○	○	●	○	○	IC circuit	
				3-wire (PNP)				M9PAV∗1	M9PA∗1	○	○	●	○	○		
				2-wire		12 V		M9BAV∗1	M9BA∗1	○	○	●	○	○	—	
Reed auto switch	—	Grommet	Yes	3-wire (NPN equivalent)	—	5 V	—	A96V	A96	●	—	●	—	—	IC circuit	—
			No	2-wire	24 V	12 V	100 V	A93V∗2	A93	●	●	●	●	—	—	Relay, PLC
							100 V or less	A90V	A90	●	—	●	—	—	IC circuit	

∗1 Although it is possible to mount water resistant type auto switches, note that the rotary actuator itself is not of water resistant construction.
∗2 1 m type lead wire is only applicable to D-A93.

∗ Lead wire length symbols: 0.5 m ····· — (Example) M9NW
1 m ····· M (Example) M9NWM
3 m ····· L (Example) M9NWL
5 m ····· Z (Example) M9NWZ

∗ Auto switches marked with "○" are produced upon receipt of order.
∗ Auto switches are shipped together, (but not assembled).

Made to Order Refer to the **WEB catalogue** or Auto Switch Guide for detailed solid state auto switches with pre-wired connectors.

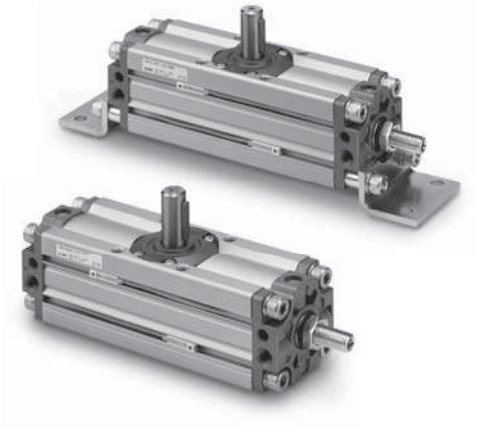

Made to Order

(For details, refer to pages 22 to 42.)

Symbol	Description	Applicable shaft type
-XA1 to -XA24	Shaft pattern sequencing Ⅰ	S, W, Y
-XA33 to -XA59	Shaft pattern sequencing Ⅱ	X, Z, T, J, K
-XC7	Reversed shaft	S, W, X, T, J
-XC30	Changed to fluorine grease	S, W, X, Y Z, T, J, K
-XC37 to -XC46	Change of rotation range and angle adjusting direction	S, W, Y
-XC47 to -XC58	Change of rotation range and angle adjusting direction (Angle adjusting screw is equipped on the left.)	S, W, Y
-XC59 to -XC61	Change of port direction	S, W, X, Y Z, T, J, K
-X7*	Heat resistant type (100 °C)	S, W, X, Y Z, T, J, K
-X16	Fluororubber seal	S, W, X, Y Z, T, J, K
-X10	Both sides angle adjustable	S, W, X, Y Z, T, J, K
-X11	One side angle adjustable, One side with cushion	S, W, X, Y Z, T, J, K

∗ -X7: Not available for the built-in magnet type.

Specifications

Type	Pneumatic			
Size	50	63	80	100
Fluid	Air (Non-lube)			
Max. operating pressure	1.0 MPa			
Min. operating pressure	0.1 MPa			
Ambient and fluid temperature	0 to 60 °C (No freezing)			
Cushion	None			
Backlash	Within 1°			
Angle adjustment range	Max. 90°			

∗ For details about the effective torque, allowable kinetic energy, and adjustable range of rotation time safe in operation, refer to page 6.

Weight

[kg]

Size	Standard weight		Additional weight		
	90°	180°	With auto switch*	Foot bracket	Flange bracket
50	1.4	1.6	0.2	0.3	0.5
63	2.4	2.8	0.4	0.5	0.9
80	4.2	4.7	0.6	0.9	1.5
100	7.8	8.8	0.9	1.2	2.0

∗ With 2 auto switches

Rotation Range of Keyway/Angle Adjustment

The shaft rotates clockwise when the pressure is applied from the A port.
The clockwise rotation end position is adjusted using the angle adjusting screw.
Note) Take appropriate measures so that no excessive external impact or vibration is applied to the angle adjusting screw.
Failure to do so may cause the angle adjusting screw to become loose or drop.

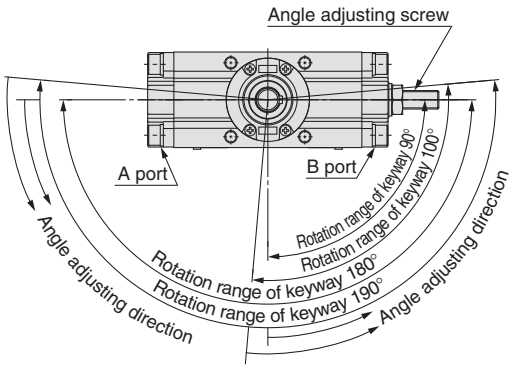

Adjustment angle per rotation of angle adjusting screw

Size	50	63	80	100
Adjusting angle	9.5°	9.4°	8.2°	6.8°

Foot Bracket/Part No.

Size	Foot bracket	Contents	Mounting screw size included in foot bracket
50	CRA1L50-Y-1Z	Foot bracket : 2 pcs. Mounting screw: 4 pcs. Collar* : 4 pcs.	M8 x 1.25 x 35
63	CRA1L63-Y-1Z		M10 x 1.5 x 40
80	CRA1L80-Y-1Z		M12 x 1.75 x 50
100	CRA1L100-Y-1Z		M12 x 1.75 x 50

∗ Remove the basic type mounting screws and use the mounting screws included in the foot bracket to secure the foot bracket to the cover. Use the collar as a spacer for the cover counterbore part and secure it together with the foot.

Dimensions/Basic Type: C□RA1BSU

Size: 50/63/80/100

Single shaft: C□RA1BSU

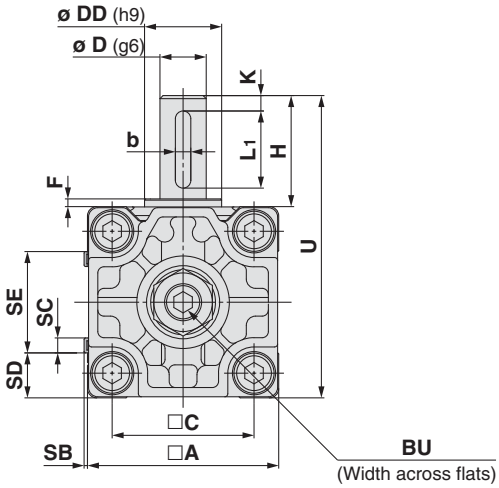

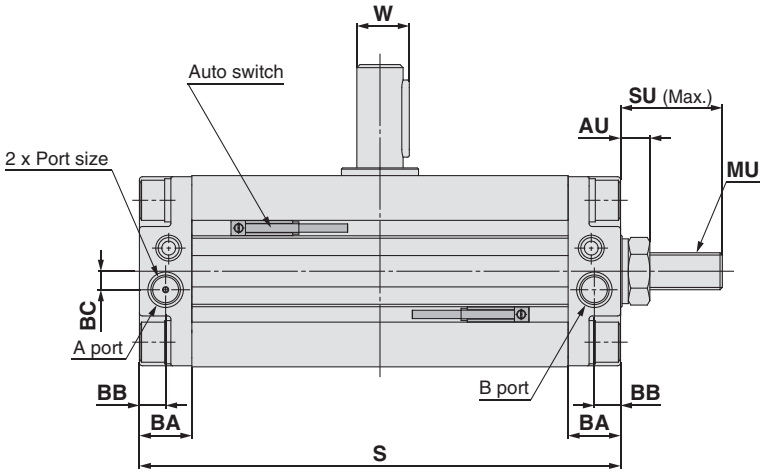

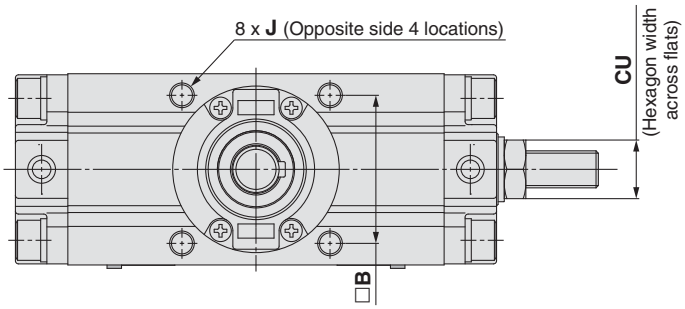

- Drawing shows the appearance for rotation of 90° and 100°.
- Dimensions show pressurisation to B port.
- Drawing shows the auto switch mounted on the port side.

∗ ( ) are the dimensions for rotation of 180° and 190°.

[mm]

Size	Port size Note 1)	A	B	C	D (g6)	DD (h9)	F	H	J	K	With auto switch					Without auto switch	U	W	BA	BB	BC
											S	SB	SC	SD	SE	S					
50	1/8	62	48	46	15	25	2.5	36	M8 x 1.25 depth 8	5	156 (189)	1.5	5	14.5	33	144 (177)	98	17	17	8.5	6
63	1/8	76	60	57	17	30	2.5	41	M10 x 1.5 depth 12	5	175 (213.5)	1.5	5	21.5	33	163 (201.5)	117	19.5	20	10	7
80	1/4	92	72	70	20	35	3	50	M12 x 1.75 depth 13	5	199 (243)	1.5	5	29.5	33	186 (230)	142	22.5	23.5	12	8
100	3/8	112	85	85	25	40	4	60	M12 x 1.75 depth 14	5	259 (325)	1.5	5	39.5	33	245 (311)	172	28	25	12.5	8

Size	AU	BU	CU	SU	MU	Key dimensions Note)	
						b	L1
50	9.5	6	19	33	M12 x 1.75	$5^{0}_{-0.030}$	25
63	10.5	6	22	35.5	M14 x 2	$6^{0}_{-0.030}$	30
80	12.5	8	24	44	M16 x 2	$6^{0}_{-0.030}$	40
100	14.5	10	30	56	M20 x 2.5	$8^{0}_{-0.036}$	45

Note) A parallel key is included in the same package, (but not assembled).

The dimensions of the shaft type W: Double shaft, X: Single shaft with four chamfers, Y: Double shaft with key, Z: Double shaft with four chamfers, T: Single round shaft, J: Double shaft round shaft, with four chamfers, K: Double round shaft, foot type, and flange type are the same as the standard type. For details, refer to pages 9 to 12.

Construction

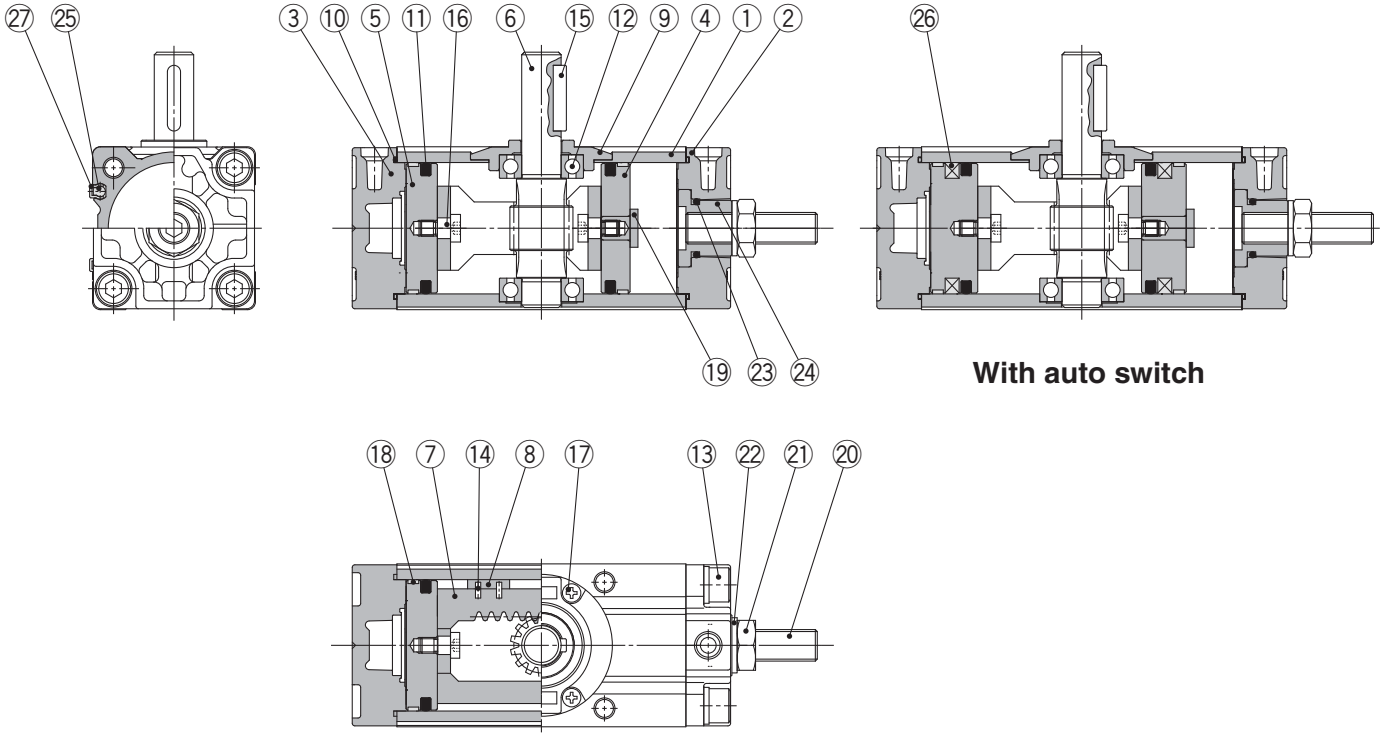

Component Parts

No.	Description	Material	Note
1	**Body**	Aluminium alloy	Anodised
2	**Right cover**	Aluminium alloy	Metallic coating
3	**Left cover**	Aluminium alloy	Metallic coating
4	**Right piston**	Aluminium alloy	
5	**Left piston**	Aluminium alloy	
6	**Shaft**	Alloy steel	
7	**Rack**	Carbon steel	Nitrided
8	**Slider**	Resin	
9	**Bearing retainer**	Aluminium alloy	Chromated
10	**Tube gasket**	NBR	
11	**Piston seal**	NBR	
12	**Bearing**	High carbon chrome bearing steel	
13	Hexagon socket head cap screw with washer	Alloy steel	Zinc chromated
14	**Spring pin**	Steel	Zinc chromated

No.	Description	Material	Note
15	**Parallel key**	Carbon steel	
16	**Connecting screw**	Carbon steel	Zinc chromated
17	Cross-recessed pan head tapping screw	Steel	Zinc chromated
18	**Wear ring**	Resin	
19	**Stopper**	Carbon steel	Zinc chromated
20	Hexagon socket head set screw (flat point)	Alloy steel	Zinc chromated
21	**Hexagon nut**	Steel	Zinc chromated
22	**Seal washer**	NBR	
23	**O-ring**	NBR	
24	**Angle adjusting collar**	Carbon steel	Zinc chromated
25	**Auto switch**	—	
26	**Magnet**	—	
27	**Switch spacer**	Resin	

Replacement Parts

Size	Part no.	Corresponding parts
50	P694020-22	⑧, ⑩, ⑪, ⑭, ㉒ are included as a set.
63	P694030-22	
80	P694040-22	
100	P694050-22	

Note) When ordering replacement parts, write “1” for one set of the parts per actuator.
A grease pack (10 g) is included.
If an additional grease pack is needed, order with the following part number. **Grease pack part number: GR-S-010** (10 g)

Auto Switch Mounting

Auto Switch Proper Mounting Position at Rotation End

Size: 30

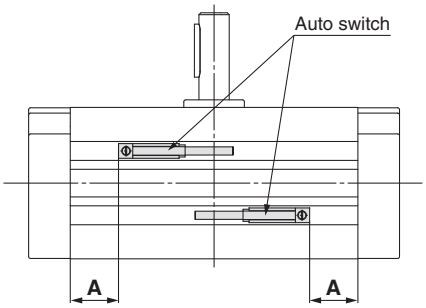

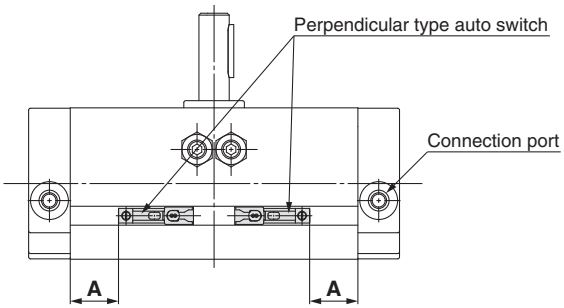

For size 30, only the perpendicular type auto switch can be mounted since two auto switches are mounted in the same switch groove when mounting the switch on the connection port side.

Size: 50 to 100

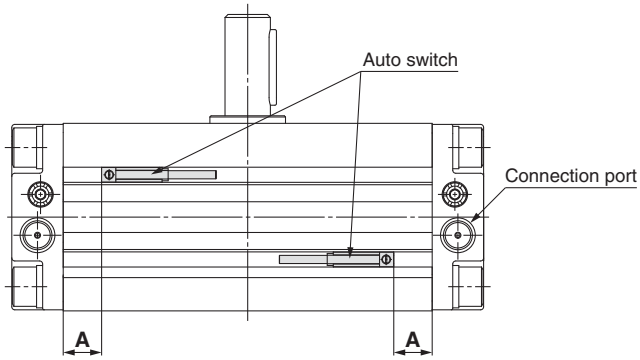

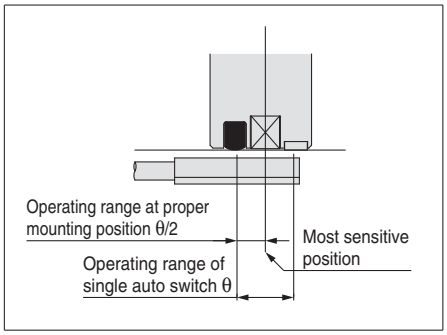

Size	Rotating angle	D-M9□/M9□V D-M9□W/M9□WV D-M9□A/M9□AV		D-A9□/A9□V	
		Proper mounting position **A** [mm]	Operating range θ [°]	Proper mounting position **A** [mm]	Operating range θ [°]
30	90	13	42°	9	81°
	180	22		18	
50	90	22.5	30°	18.5	44°
	180	39		35	
63	90	25	28°	21	49°
	180	44.5		40.5	
80	90	27.5	23°	23.5	41°
	180	49.5		45.5	
100	90	42.5	15°	38.5	29°
	180	75.5		71.5	

∗ Values which include hysteresis are for guideline purposes only, they are not a guarantee (assuming approximately ±30 % dispersion) and may change substantially depending on the ambient environment. Adjust the auto switch after confirming the operating conditions in the actual setting.

Switch Spacer/Part No.

Size	30	50	63	80	100
Switch spacer part no.	BMY3-016				

∗ The above part number includes one switch spacer.
∗ Two switch spacers are included with the product with built-in magnet.

Auto Switch Mounting

To fix the auto switch, hold the switch spacer, and insert into the groove. Make sure that the switch spacer is in the right position or correct the position if necessary, then slide the auto switch in the groove so that it goes into the spacer. Confirm where the mounting position is, and tighten the auto switch mounting screw using a flat head screwdriver.

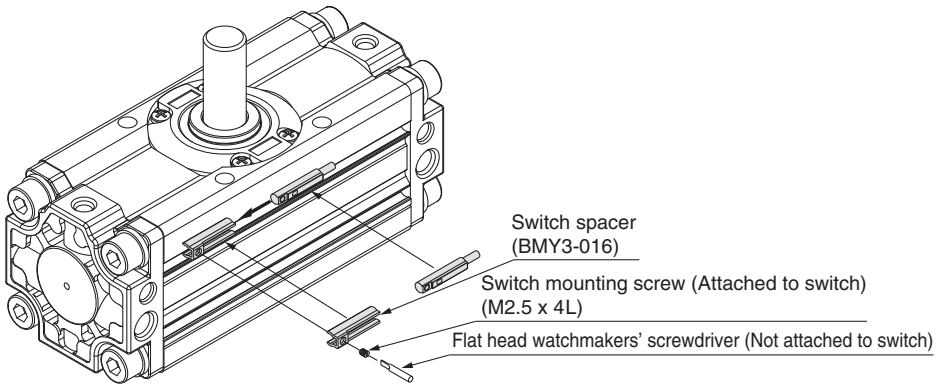

Note) When tightening an auto switch mounting screw, use a watchmakers' screwdriver with a handle of approximately 5 to 6 mm in diameter.
Also, tighten with a torque of about 0.1 to 0.15 N·m.
As a guide, turn about 90° past the point at which tightening can first be felt.

Auto Switch Working Principle

[Pressure is applied from the B port.]
The auto switch B is turned ON by the magnet B in the state that the pressure is applied from the B port and the piston B moves to the left side. At this time, the auto switch A turns OFF.

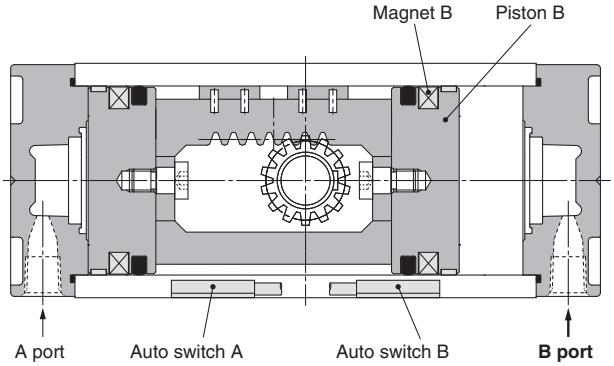

[Pressure is applied from the A port.]
When the pressure is applied from the A port, the piston A moves to the right side and the shaft rotates clockwise. The auto switch B turns OFF and the auto switch A is turned ON by the magnet A at the rotation end.

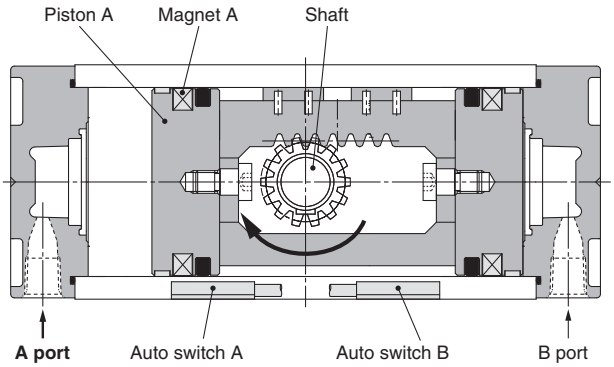

CONTENTS

Rotary Actuator *Series CRA1*

Simple Specials/Made to Order

Simple specials

Shaft pattern sequencing Ⅰ **-XA1** to **-XA24** ..... Page 23

Shaft pattern sequencing Ⅱ **-XA33** to **-XA59** ..... Page 27

Made to Order

How to Order ..... Page 32

①Reversed shaft **-XC7** ..... Page 33

②Change of rotation range **-XC8** to **-XC11** ..... Page 33

③Changed to fluorine grease **-XC30** ..... Page 33

④Change of rotation range and shaft rotation direction **-XC31** to **XC36** ..... Page 34

⑤Change of rotation range and angle adjusting direction **-XC37** to **XC42** ..... Page 35

⑥Change of rotation range and angle adjusting direction **-XC43** to **XC46** ..... Page 36

⑦Change of rotation range and angle adjusting direction
(Angle adjusting screw is equipped on the left.) **-XC47** to **XC52** ..... Page 37

⑧Change of rotation range and angle adjusting direction
(Angle adjusting screw is equipped on the left.) **-XC53** to **XC58** ..... Page 38

⑨Change of port location
(Mounting location of the cover is changed.) **-XC59** to **XC61** ..... Page 39

⑩One side air-hydro, One side air **-XC63**, **-XC64** ..... Page 39

⑪Stainless steel shaft/Bolt/Parallel key **-X6** ..... Page 40

⑫Heat resistant **-X7** ..... Page 40

⑬Both sides angle adjustable **-X10** ..... Page 40

⑭One side angle adjustable, One side with cushion **-X11** ..... Page 41

⑮Fluororubber seal **-X16** ..... Page 41

Made to Order/**-X6** to **-X16** ..... Page 42

Series CRA1
Simple Specials

Shaft shape pattern is dealt with simple made-to-order system. A specification sheet is available for ordering. Please access SMC website, or consult your nearest sales branch.

Made to Order

Symbol

Shaft Pattern Sequencing Ⅰ — -XA1 to -XA24

Applicable shaft type: S, W, Y

How to Order

C [D] RA1 [B] [S] [ ] [50] [ ] – [90] [ ] Z – [M9BW] [ ] – X [A1] [A2] [C8] [C59]

Magnet

—	None
D	Built-in magnet

Mounting

B	Basic type
L	Foot type

Shaft type

S	Single shaft
W	Double shaft
Y	Double shaft with key

Variation

—	Without angle adjustment
U Note)	Angle adjustable type
H Note)	Air-hydro type

Note) Except size 30

Size

30
50
63
80
100

Port type

Size		30	50	63	80	100
—	M thread	M5	—	—	—	—
	Rc	—	1/8	1/8	1/4	3/8
TF	G	—				
TN	NPT	—				
TT	NPTF	—				

Rotating angle

90	90°
180	180°
100 Note)	100°
190 Note)	190°

Note) Except size 30

Cushion

—	Without air cushion
C Note)	With air cushion

Note) Except angle adjustable type, air-hydro type.

Auto switch

—	Without auto switch (Built-in magnet)

Note 1) For applicable auto switch model, refer to page 5.
Note 2) Auto switches are shipped together, (but not assembled).

Number of auto switches

—	2 pcs.
S	1 pc.

Symbol for simple specials, made-to-order products

Note) Combination of XA is possible for up to 2 types.

• Combination 3 types / **• Combination of applicable chart**

A1	A24	C59	→ Chart 1, 2
A13	C8	C59	→ Chart 2, 7

Combination is available only when all the conditions are fulfilled in the combination chart.

• Combination 4 types / **• Combination of applicable chart**

A1	A2	C8	C59	→ Chart 1, 2, 7
A2	A24	C10	C60	→ Chart 1, 2, 7

Combination is available only when all the conditions are fulfilled in the combination chart.

Note 1) Combination of simple special and made-to-order is possible for up to 4 types.
Note 2) Above is the typical example of combination.

Symbol

Shaft Pattern Sequencing Ⅰ

-XA1 to -XA24

Applicable shaft type: S, W, Y

Combination Chart of Simple Specials for Shaft Shape

Chart 1. Combination between -XA□ and -XA□ (S, W, Y shaft)

Symbol	Description	Axial direction		Applicable shaft type			Combination			
		Top	Bottom	S	W	Y	-XA1	-XA2	-XA13	-XA24
-XA1	Shaft-end female thread	●	—	●	●	●	—	●	—	●
-XA2	Shaft-end female thread	—	●	●	●	●	●	—	—	●
-XA13	Shaft through-hole	●	●	●	●	●	—	—	—	●
-XA14	Shaft through-hole + Shaft-end female thread	●	—	●	●	●	—	—	—	●
-XA15	Shaft through-hole + Shaft-end female thread	—	●	●	●	●	—	—	—	●
-XA16	Shaft through-hole + Double shaft-end female thread	●	●	●	●	●	—	—	—	●
-XA17	Shorted shaft (Long shaft with key)	●	—	●	●	●	—	●	●	—
-XA18	Shorted shaft (Short shaft and with four sided chamfer)	—	●	—	●	●	W, Y*	—	W, Y*	—
-XA19	Shorted shaft (Double shaft)	●	●	—	●	●	—	—	W, Y*	—
-XA20	Reverse shaft, Shorted shaft	●	●	—	●	●	—	—	S, W*	—
-XA24	Double key	●	—	●	●	●	—	—	—	—

∗ Corresponding shafts type available for combination

Combination Chart of Made to Order

Chart 2. Combination between -XA□ and -XC□

Symbol	Description	Applicable shaft type			Applicable size	Combination	
		S	W	Y		-XA1, 2, 13 to 19	-XA20, 24
-XC7	Reversed shaft	●	●	—	50, 63, 80, 100	—	—
-XC8 to -XC11	Change of rotation range	●	●	●		●	—
-XC30	Changed to fluorine grease	●	●	●	30 to 100	●	●
-XC31 to -XC36	Change of rotation range and shaft rotation direction	●	●	●	50, 63, 80, 100	●	—
-XC37 to -XC46	Change of rotation range and angle adjusting direction	●	●	●		●	—
-XC47 to -XC58	Change of rotation range and angle adjusting direction (Angle adjusting screw is equipped on the left.)	●	●	●		●	—
-XC59 to -XC61	Change of port location	●	●	●	30 to 100	●	●
-XC63	One side air-hydro, One side air	●	●	●	50, 63, 80, 100	●	●
-XC64	One side air-hydro, One side air	●	●	●		●	●

∗ -XC8 to -XC11 and -XC31 to -XC36 do not include the angle adjustable type.
∗ -XC37 to -XC46 and -XC47 to -XC58 are only the angle adjustable type.
∗ -XC63 and -XC64 are only the air-hydro type.

Chart 3. Combination between -X□ and -XA□

Symbol	Description	Applicable shaft type			Applicable size	Combination	
		S	W	X		-XA1, 2, 13 to 19	-XA20, 24
-X6	Stainless steel shaft/bolt, etc.	●	●	●	30 to 100	●	●
-X7	Heat resistant (100 °C)	●	●	●		●	●
-X10	Both sides angle adjustable	●	●	●	50 to 100	●	●
-X11	One side angle adjustable, One side with cushion	●	●	●		●	●
-X16	Fluororubber seal	●	●	●	30 to 100	●	●

∗ -X10 and -X11 are only the angle adjustable type.

Symbol

Shaft Pattern Sequencing Ⅰ

-XA1 to -XA17

Applicable shaft type: S, W, Y

Additional Reminders

1. Enter the dimensions within a range that allows for additional machining.
2. SMC will make appropriate arrangements if no dimensional, tolerance, or finish instructions are given in the diagram.
3. The length of the unthreaded portion is 2 to 3 pitches.
4. Unless specified otherwise, the thread pitch is based on coarse metric threads.
   P = Thread pitch
   M4 x 0.7, M5 x 0.8, M6 x 1,
   M8 x 1.25, M10 x 1.5
5. Enter the desired figures in the ☐ portion of the diagram.
6. Chamfer face of the parts machining additionally is C0.5.

Symbol: A1 Machine female threads into the long shaft. Note) Except flange type

The maximum dimension L1 is, as a rule, twice the thread size.
(Example) For M4: L1 = 8
· Applicable shaft types: S, W, Y

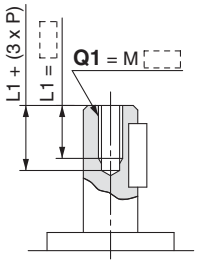

[mm]

Size	Q1
30	M3
50	M4, M5, M6
63	M4, M5, M6
80	M4, M5, M6, M8
100	M5, M6, M8, M10

Symbol: A2 Machine female threads into the short shaft. Note) Except flange type

The maximum dimension L2 is, as a rule, twice the thread size.
(Example) For M4: L2 = 8
· Applicable shaft types: S, W, Y

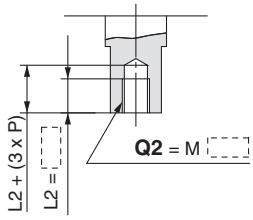

[mm]

Size	Q2
30	M3, M4
50	M4, M5, M6
63	M4, M5, M6
80	M4, M5, M6, M8
100	M5, M6, M8, M10

Symbol: A13 Shaft through-hole Note) Except flange type

Minimum machining diameter for d1 is 0.1.
· Applicable shaft types: S, W, Y

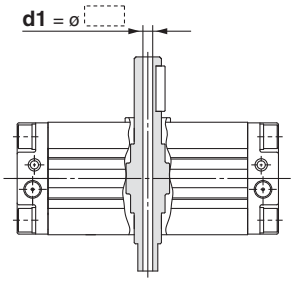

[mm]

Size	d1
30	Ø 2.5
50	Ø 4 to Ø 7
63	Ø 4 to Ø 8
80	Ø 6.8 to Ø 11
100	Ø 6.8 to Ø 13

Symbol: A14 Note) Except flange type

A special end is machined onto the long shaft, and a through-hole is drilled into it. Female threads are machined into the throughhole, whose diameter is equivalent to the pilot hole diameter.
The maximum dimension L1 is, as a rule, twice the thread size.
(Example) For M5: L1 = 10
· Applicable shaft types: S, W, Y

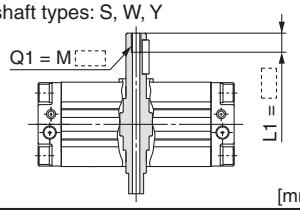

[mm]

Thread \ Size	30	50	63	80	100
M3 x 0.5	Ø 2.5	—	—	—	—
M5 x 0.8	—	Ø 4	Ø 4	—	—
M6 x 1	—	Ø 5	Ø 5	—	—
M8 x 1.25	—	—	Ø 6.8	Ø 6.8	Ø 6.8
M10 x 1.5	—	—	—	Ø 8.5	Ø 8.5
M12 x 1.75	—	—	—	Ø 10.3	Ø 10.3
Rc 1/8	—	—	—	Ø 8	Ø 8
Rc 1/4	—	—	—	—	Ø 11

Symbol: A15 Note) Except flange type

A special end is machined onto the short shaft, and a through-hole is drilled into it. Female threads are machined into the through-hole, whose diameter is equivalent to the pilot hole diameter.
The maximum dimension L2 is, as a rule, twice the thread size.
(Example) For M5: L2 = 10
· Applicable shaft types: S, W, Y

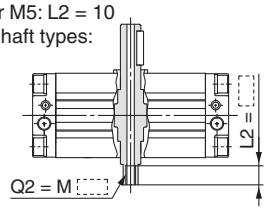

[mm]

Thread \ Size	30	50	63	80	100
M3 x 0.5	Ø 2.5	—	—	—	—
M5 x 0.8	—	Ø 4	Ø 4	—	—
M6 x 1	—	Ø 5	Ø 5	—	—
M8 x 1.25	—	—	Ø 6.8	Ø 6.8	Ø 6.8
M10 x 1.5	—	—	—	Ø 8.5	Ø 8.5
M12 x 1.75	—	—	—	Ø 10.3	Ø 10.3
Rc 1/8	—	—	—	Ø 8	Ø 8
Rc 1/4	—	—	—	—	Ø 11

Symbol: A16 Note) Except flange type

A special end is machined onto both the long and short shafts, and a through-hole is drilled into both shafts. Female threads are machined into the through-holes, whose diameter is equivalent to the diameter of the pilot holes.
The maximum dimension L1 is, as a rule, twice the thread size.
(Example) For M5: L1 = 10
· Applicable shaft types: S, W, Y
· Equal dimensions are indicated by the same marker.

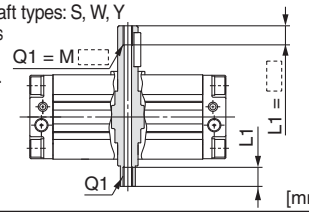

[mm]

Thread \ Size	30	50	63	80	100
M3 x 0.5	Ø 2.5	—	—	—	—
M5 x 0.8	—	Ø 4	Ø 4	—	—
M6 x 1	—	Ø 5	Ø 5	—	—
M8 x 1.25	—	—	Ø 6.8	Ø 6.8	Ø 6.8
M10 x 1.5	—	—	—	Ø 8.5	Ø 8.5
M12 x 1.75	—	—	—	Ø 10.3	Ø 10.3
Rc 1/8	—	—	—	Ø 8	Ø 8
Rc 1/4	—	—	—	—	Ø 11

Symbol: A17 Note) Except flange type

Shorten the long shaft.
· Applicable shaft types: S, W, Y

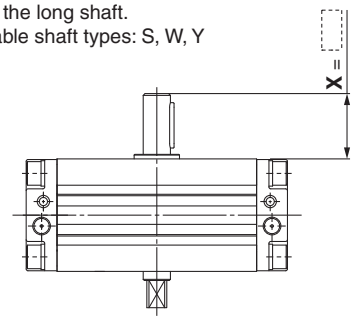

[mm]

Size	X
30	15 to 25
50	18.5 to 36
63	21 to 41
80	25 to 50
100	32.5 to 60

Symbol

Shaft Pattern Sequencing Ⅰ

-XA18 to -XA24

Applicable shaft type: S, W, Y

Symbol: A18 Note) Except flange type

Shorten the short shaft.
· Applicable shaft types: W, Y

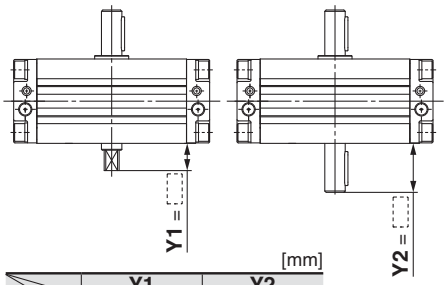

[mm]

Size \ Shaft type	Y1	Y2
	W	Y
30	3 to 8	15 to 25
50	1 to 20	18.5 to 36
63	1 to 22	21 to 41
80	1 to 25	25 to 50
100	1 to 30	32.5 to 60

Symbol: A19 Note) Except flange type

Both the long shaft and short shaft are shortened.
· Applicable shaft types: W, Y

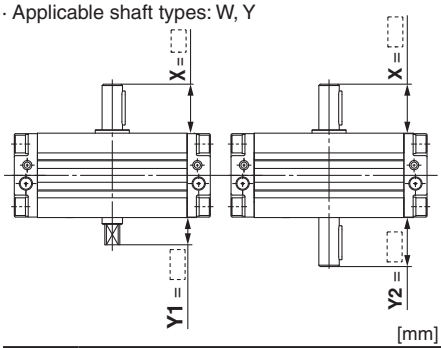

[mm]

Size \ Shaft type	X		Y1	Y2
	W	Y	W	Y
30	15 to 25		3 to 8	15 to 25
50	18.5 to 36		1 to 20	18.5 to 36
63	21 to 41		1 to 22	21 to 41
80	25 to 50		1 to 25	25 to 50
100	32.5 to 60		1 to 30	32.5 to 60

Symbol: A20 Note) Except flange type

Reverse the assembly of the shaft. (Thus shortening the long end and the short end of the shaft.)
(If shortening the shaft is not required, indicate "*" for dimension X and Y.)
· Applicable shaft types: S, W

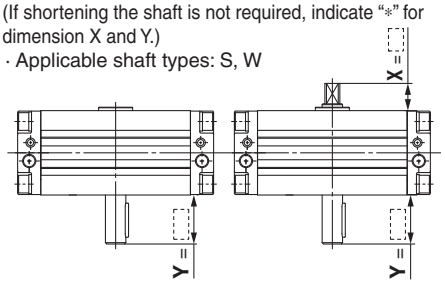

[mm]

Size \ Shaft type	X	Y	
	W	S	W
50	2 to 11	18.5 to 36	
63	2.5 to 16.5	21 to 41	
80	3 to 20	25 to 50	
100	3 to 22	32.5 to 60	

Symbol: A24

Double key
Keys and keyways are machined additionally at 180° from the standard position.
· Applicable shaft types: S, W, Y
· Equal dimensions are indicated by the same marker.

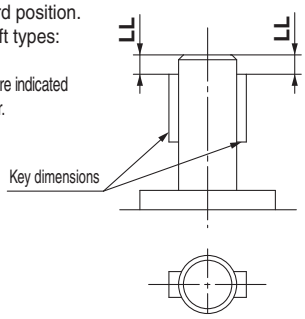

[mm]

Size	Key dimensions	LL
30	3 x 3 x 14	3
50	5 x 5 x 25	5
63	6 x 6 x 30	5
80	6 x 6 x 40	5
100	8 x 7 x 45	5

Shaft Pattern Sequencing Ⅱ

Symbol
-XA33 to -XA59

Applicable shaft type: X, Z, T, J, K

How to Order

C [D] RA1 [B] [J] [ ] [50] [ ] – [90] [ ] Z – [M9BW] [ ] – X [A33] [A34] [C8] [C30]

Magnet

—	None
D	Built-in magnet

Mounting

B	Basic type
L	Foot type

Shaft type

X	Single shaft with four chamfers
Z	Double shaft with four chamfers
T	Single round shaft
J	Double shaft (round shaft, with four chamfers)
K	Double round shaft

Variation

—	Without angle adjustment
U Note)	Angle adjustable type
H Note)	Air-hydro type

Note) Except size 30

Size

30
50
63
80
100

Port type

Size		30	50	63	80	100
—	M thread	M5	—	—	—	—
	Rc	—	1/8	1/8	1/4	3/8
TF	G	—				
TN	NPT	—				
TT	NPTF	—				

Rotating angle

90	90°
180	180°
100 Note)	100°
190 Note)	190°

Note) Except size 30

Cushion

—	Without air cushion
C Note)	With air cushion

Note) Except angle adjustable type, air-hydro type.

Auto switch

—	Without auto switch (Built-in magnet)

Note 1) For applicable auto switch model, refer to page 5.
Note 2) Auto switches are shipped together, (but not assembled).

Number of auto switches

—	2 pcs.
S	1 pc.

Symbol for simple specials, made-to-order products

Note) Combination of XA is possible for up to 2 types.

• Combination 3 types / **• Combination of applicable chart**

A33	A34	C30	→ Chart 4, 5
A35	C9	C59	→ Chart 5, 7

Combination is available only when all the conditions are fulfilled in the combination chart.

• Combination 4 types / **• Combination of applicable chart**

A33	A34	C30	C59	→ Chart 4, 5, 7
A45	A46	C30	C61	→ Chart 4, 5, 7

Combination is available only when all the conditions are fulfilled in the combination chart.

Note 1) Combination of simple special and made-to-order is possible for up to 4 types.
Note 2) Above is the typical example of combination.

Symbol

Shaft Pattern Sequencing Ⅱ

-XA33 to -XA59

Applicable shaft type: X, Z, T, J, K

Combination Chart of Simple Specials for Shaft Shape

Chart 4. Combination between -XA□ and -XA□

Symbol	Description	Axial direction		Applicable shaft type					Combination									
		Top	Bottom	X	Z	T	J	K	∗ Corresponding shafts type available for combination									
-XA33	Shaft-end female thread	●	—	—	—	●	●	●	**-XA33**									
-XA34	Shaft-end female thread	—	●	—	—	●	●	●	T, J, K*	**-XA34**								
-XA35	Shaft-end female thread	●	—	●	●	—	—	—	—	—	**-XA35**							
-XA36	Shaft-end female thread	—	●	●	●	—	—	—	—	—	X, Z*	**-XA36**						
-XA37	Stepped round shaft	●	—	—	—	●	●	●	—	T, J, K*	—	—	**-XA37**					
-XA38	Stepped round shaft	—	●	—	—	—	—	●	K*	—	—	—	K*					
-XA40	Shaft through-hole	●	●	—	—	●	—	●	—	—	—	—	—					
-XA41	Shaft through-hole	●	●	●	●	—	●	—	—	—	—	—	—					
-XA43	Shaft through-hole + Double shaft-end female thread	●	●	—	—	●	—	●	—	—	—	—	—					
-XA44	Shaft through-hole + Double shaft-end female thread	●	●	●	●	—	●	—	—	—	—	—	—	**-XA38**				
-XA45	Middle-cut chamfer	●	—	—	—	●	●	●	—	T, J, K*	—	—	—	K*	**-XA40**	**-XA41**	**-XA45**	
-XA46	Middle-cut chamfer	—	●	—	—	—	—	●	K*	—	—	—	K*	—	—	—	K*	**-XA46**
-XA51	Change of long shaft length (Without keyway)	●	—	—	—	●	●	●	—	T, J, K*	—	—	—	K*	T, K*	J*	—	K*
-XA52	Change of short shaft length (Without keyway)	—	●	—	—	—	—	●	K*	—	—	—	—	—	K*	—	K*	—
-XA53	Change of double shaft length (Both without keyway)	●	●	—	—	—	—	●	—	—	—	—	—	—	K*	—	—	—
-XA54	Change of long shaft length (With four chamfers)	●	—	●	●	—	—	—	—	—	—	X, Z*	—	—	—	X, Z*	—	—
-XA55	Change of short shaft length (With four chamfers)	—	●	—	●	—	●	—	J*	—	Z*	—	J*	—	—	J, Z*	J*	—
-XA56	Change of double shaft length (Both with four chamfers)	●	●	—	●	—	—	—	—	—	—	—	—	—	—	Z*	—	—
-XA57	Change of double shaft length (Without keyway, With hour chamfers)	●	●	—	—	—	●	—	—	—	—	—	—	—	—	J*	—	—
-XA58	Reversed shaft, Change of shaft length (With four chamfers, Without keyway)	●	●	—	—	●	●	—	—	—	—	—	—	—	T*	J*	—	—
-XA59	Reversed shaft, Change of shaft length (With four chamfers)	—	●	●	—	—	—	—	—	—	—	—	—	—	—	X*	—	—

Combination Chart of Made to Order

Chart 5. Combination between -XA□ and -XC□

Symbol	Description	Applicable shaft type					Applicable size	Combination
		X	Z	T	J	K		-XA33 to 38, 40 to 46, 51 to 59
-XC7	Reversed shaft	●	—	●	●	—	50, 63, 80, 100	—
-XC8 to -XC11	Change of rotation range	—	—	—	—	—		—
-XC30	Changed to fluorine grease	●	●	●	●	●	30 to 100	●
-XC31 to -XC36	Change of rotation range and shaft rotation direction	—	—	—	—	—	50, 63, 80, 100	—
-XC37 to -XC46	Change of rotation range and angle adjusting direction	—	—	—	—	—		—
-XC47 to -XC58	Change of rotation range and angle adjusting direction (Angle adjusting screw is equipped on the left.)	—	—	—	—	—		—
-XC59 to -XC61	Change of port location	●	●	●	●	●	30 to 100	●
-XC63	One side air-hydro, One side air	●	●	●	●	●	50, 63, 80, 100	●
-XC64	One side air-hydro, One side air	●	●	●	●	●		●

∗ -XC8 to -XC11 and -XC31 to -XC36 do not include the angle adjustable type.
∗ -XC37 to -XC46 and -XC47 to -XC58 are only the angle adjustable type.
∗ -XC63 and -XC64 are only the air-hydro type.

Chart 6. Combination between -X□ and -XA□

Symbol	Description	Applicable shaft type					Applicable size	Combination
		X	Z	T	J	K		-XA33 to 38, 40 to 46, 51 to 59
-X6	Stainless steel shaft/bolt, etc.	●	●	●	●	●	30 to 100	●
-X7	Heat resistant (100 °C)	●	●	●	●	●		●
-X10	Both sides angle adjustable	●	●	●	●	●	50 to 100	●
-X11	One side angle adjustable, One side with cushion	●	●	●	●	●		●
-X16	Fluororubber seal	●	●	●	●	●	30 to 100	●

∗ -X10 and -X11 are only the angle adjustable type.

Symbol

Shaft Pattern Sequencing Ⅱ

-XA33 to -XA41

Applicable shaft type: X, Z, T, J, K

Additional Reminders

1. Enter the dimensions within a range that allows for additional machining.
2. SMC will make appropriate arrangements if no dimensional, tolerance, or finish instructions are given in the diagram.
3. The length of the unthreaded portion is 2 to 3 pitches.
4. Unless specified otherwise, the thread pitch is based on coarse metric threads.
   P = Thread pitch
   M4 x 0.7, M5 x 0.8
   M6 x 1, M8 x 1.25, M10 x 1.5
5. Enter the desired figures in the ☐ portion of the diagram.
6. Chamfer face of the parts machining additionally is C0.5.

Symbol: A33 Machine female threads into the long shaft. Note) Except flange type

The maximum dimension L1 is, as a rule, twice the thread size.
(Example) For M4: L1 = 8
· Applicable shaft types: J, K, T

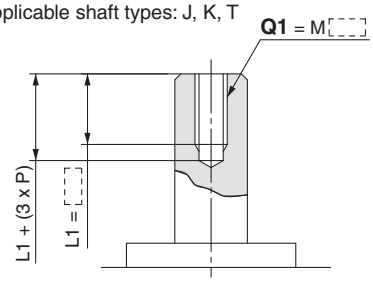

[mm]

Size	Q1
30	M3
50	M4, M5, M6, M8
63	M4, M5, M6, M8, M10
80	M4, M5, M6, M8, M10, M12
100	M5, M6, M8, M10, M12

Symbol: A34 Machine female threads into the short shaft. Note) Except flange type

The maximum dimension L2 is, as a rule, twice the thread size.
(Example) For M4: L2 = 8
· Applicable shaft types: J, K, T

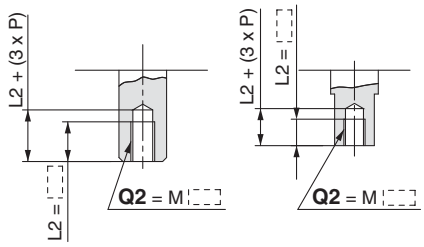

[mm]

Size	Q2
30	M3
50	M4, M5, M6, M8
63	M4, M5, M6, M8, M10
80	M4, M5, M6, M8, M10, M12
100	M5, M6, M8, M10, M12

Symbol: A35 Machine female threads into the long shaft. Note) Except flange type

The maximum dimension L1 is, as a rule, twice the thread size.
(Example) For M4: L1 = 8
· Applicable shaft types: X, Z

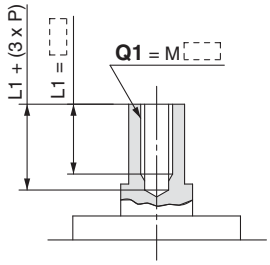

[mm]

Size	Q1
30	M3
50	M4, M5, M6, M8
63	M4, M5, M6, M8, M10
80	M4, M5, M6, M8, M10, M12
100	M5, M6, M8, M10, M12

Symbol: A36 Machine female threads into the short shaft. Note) Except flange type

The maximum dimension L2 is, as a rule, twice the thread size.
(Example) For M4: L2 = 8
· Applicable shaft types: X, Z

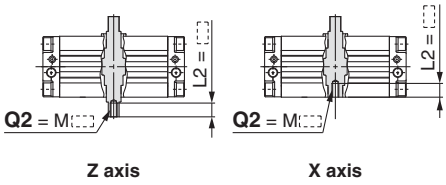

[mm]

Size	Q2
30	M3
50	M4, M5, M6, M8
63	M4, M5, M6, M8, M10
80	M4, M5, M6, M8, M10, M12
100	M5, M6, M8, M10, M12

Symbol: A37 Note) Except flange type

The long shaft can be further shortened by machining it into a stepped round shaft.
· The minimum unit of the dimensions within a range that allows for machining is 0.1.
(If shortening the shaft is not required, indicate "∗" for dimension X.)
(If not specifying dimension C1, indicate "∗" instead.)
· Applicable shaft types: J, K, T
· Equal dimensions are indicated by the same marker.

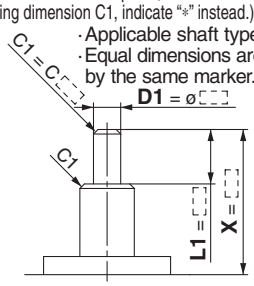

[mm]

Size	X	L1max	D1
30	3 to 25	X-2	Ø 5 to Ø 7.9
50	3.5 to 36	X-2.5	Ø 5 to Ø 14.9
63	3.5 to 41	X-2.5	Ø 5 to Ø 16.9
80	4 to 50	X-3	Ø 8 to Ø 19.9
100	5 to 60	X-4	Ø 8 to Ø 24.9

Symbol: A38 Note) Except flange type

The short shaft can be further shortened by machining it into a stepped round shaft.
· The minimum unit of the dimensions within a range that allows for machining is 0.1.
(If shortening the shaft is not required, indicate "∗" for dimension Y.)
(If not specifying dimension C2, indicate "∗" instead.)
· Applicable shaft type: K
· Equal dimensions are indicated by the same marker.

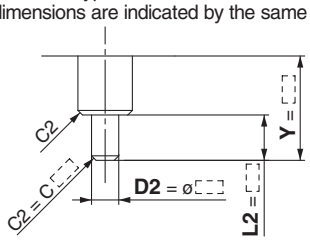

[mm]

Size	Y	L2max	D2
30	3 to 25	Y-2	Ø 5 to Ø 7.9
50	1 to 36	Y	Ø 5 to Ø 14.9
63	1 to 41	Y	Ø 5 to Ø 16.9
80	1 to 50	Y	Ø 8 to Ø 19.9
100	1 to 60	Y	Ø 8 to Ø 24.9

Symbol: A40 Shaft through-hole Note) Except flange type

· Minimum machining diameter for d1 is 0.1.
· Applicable shaft types: K, T

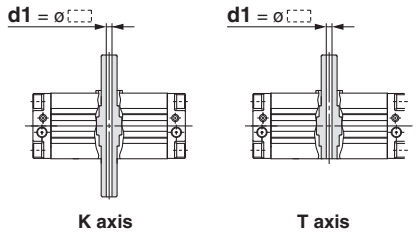

[mm]

Size	d1
30	Ø 2.5
50	Ø 4 to Ø 7.5
63	Ø 4 to Ø 8
80	Ø 6.8 to Ø 11
100	Ø 6.8 to Ø 13

Symbol: A41 Shaft through-hole Note) Except flange type

· Minimum machining diameter for d1 is 0.1.
· Applicable shaft types: J, X, Z

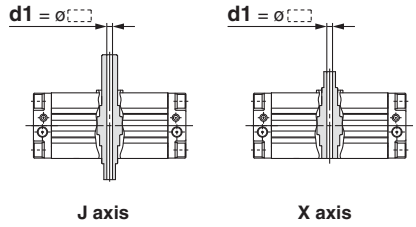

[mm]

Size	d1
30	Ø 2.5
50	Ø 4 to Ø 7.5
63	Ø 4 to Ø 8
80	Ø 6.8 to Ø 11
100	Ø 6.8 to Ø 13

Symbol

Shaft Pattern Sequencing Ⅱ

-XA43 to -XA55

Applicable shaft type: X, Z, T, J, K

Symbol: A43 Shaft through-hole and female thread
Note) Except flange type

- Applicable shaft types: K, T
- Equal dimensions are indicated by the same marker.

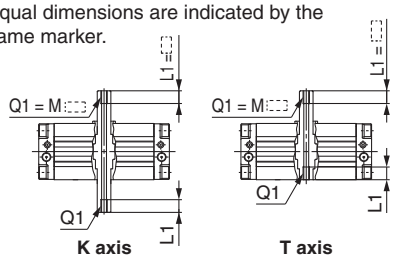

[mm]

Thread \ Size	30	50	63	80	100
M3 x 0.5	Ø 2.5	—	—	—	—
M5 x 0.8	—	Ø 4	Ø 4	—	—
M6 x 1	—	Ø 5	Ø 5	—	—
M8 x 1.25	—	—	Ø 6.8	Ø 6.8	Ø 6.8
M10 x 1.5	—	—	—	Ø 8.5	Ø 8.5
M12 x 1.75	—	—	—	Ø 10.3	Ø 10.3
Rc 1/8	—	—	—	Ø 8	Ø 8
Rc 1/4	—	—	—	—	Ø 11

Symbol: A44 Note) Except flange type

Shaft through-hole and female thread machining
- Applicable shaft types: J, X, Z
- Equal dimensions are indicated by the same marker.

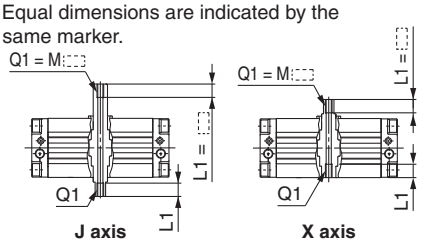

[mm]

Thread \ Size	30	50	63	80	100
M3 x 0.5	Ø 2.5	—	—	—	—
M5 x 0.8	—	Ø 4	Ø 4	—	—
M6 x 1	—	Ø 5	Ø 5	—	—
M8 x 1.25	—	—	Ø 6.8	Ø 6.8	Ø 6.8
M10 x 1.5	—	—	—	Ø 8.5	Ø 8.5
M12 x 1.75	—	—	—	Ø 10.3	Ø 10.3
Rc 1/8	—	—	—	Ø 8	Ø 8
Rc 1/4	—	—	—	—	Ø 11

Symbol: A45 Note) Except flange type

The long shaft can be further shortened by machining a middle-cut chamfer into it.
- The minimum unit of the dimensions within a range that allows for machining is 0.1.

(The position is that of the standard flat at the keyway portion.)
(If shortening the shaft is not required, indicate "*" for dimension X.)
- Applicable shaft types: J, K, T

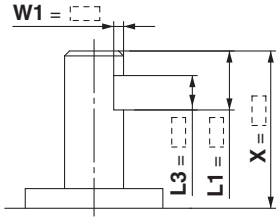

[mm]

Size	X	W1	L1max	L3max
30	8.5 to 25	1 to 2	X-2	L1-2
50	12.5 to 36	1 to 5.5	X-2.5	L1-2
63	13.5 to 41	1 to 6.5	X-2.5	L1-2
80	16.5 to 50	1 to 8	X-3	L1-3
100	21 to 60	1.5 to 10.5	X-4	L1-4

Symbol: A46 Note) Except flange type

The short shaft can be further shortened by machining a middle-cut chamfer into it.
- The minimum unit of the dimensions within a range that allows for machining is 0.1.

(The position is that of the standard flat at the keyway portion.)
(If shortening the shaft is not required, indicate "*" for dimension Y.)
- Applicable shaft type: K

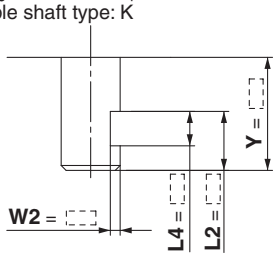

[mm]

Size	Y	W2	L2max	L4max
30	8.5 to 25	1 to 2	Y-2	L2-2
50	10 to 36	1 to 5.5	Y	L2-2
63	11 to 41	1 to 6.5	Y	L2-2
80	13.5 to 50	1 to 8	Y	L2-3
100	17 to 60	1.5 to 10.5	Y	L2-4

Symbol: A51 Note) Except flange type

Shorten the long shaft.
- Applicable shaft types: J, K, T

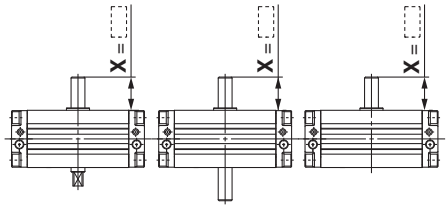

[mm]

Size	X
30	3 to 25
50	3.5 to 36
63	3.5 to 41
80	4 to 50
100	5 to 60

Symbol: A52 Note) Except flange type

Shorten the short shaft.
- Applicable shaft type: K

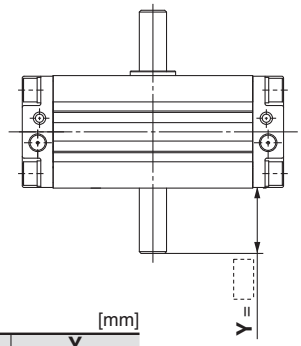

[mm]

Size	Y
30	3 to 25
50	1 to 36
63	1 to 41
80	1 to 50
100	1 to 60

Symbol: A53 Note) Except flange type

Both the long shaft and short shaft are shortened.
- Applicable shaft type: K

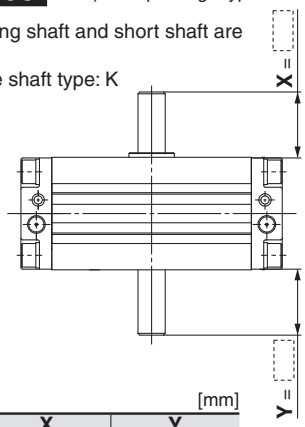

[mm]

Size	X	Y
30	3 to 25	3 to 25
50	3.5 to 36	1 to 36
63	3.5 to 41	1 to 41
80	4 to 50	1 to 50
100	5 to 60	1 to 60

Symbol: A54 Note) Except flange type

Shorten the long shaft.
- Applicable shaft types: X, Z

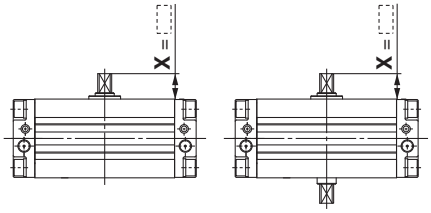

[mm]

Size	X
30	3 to 13
50	3.5 to 27
63	3.5 to 29
80	4 to 38
100	5 to 44

Symbol: A55 Note) Except flange type

Shorten the short shaft.
- Applicable shaft types: J, Z

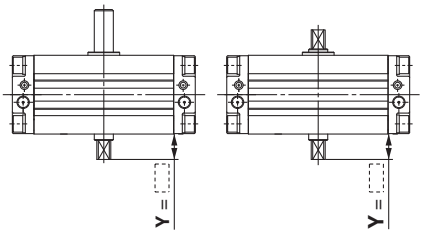

[mm]

Size	Y
30	3 to 10
50	1 to 20
63	1 to 22
80	1 to 25
100	1 to 30

Symbol

Shaft Pattern Sequencing Ⅱ

-XA56 to -XA59

Applicable shaft type: X, Z, T, J, K

Symbol: A56 Note) Except flange type

Both the long shaft and short shaft are shortened.
· Applicable shaft type: Z

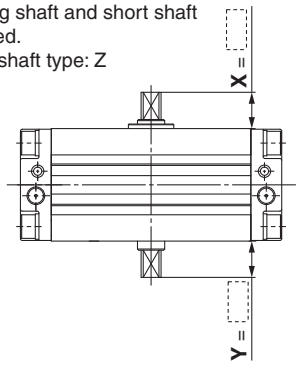

[mm]

Size	X	Y
30	3 to 13	3 to 10
50	3.5 to 27	1 to 20
63	3.5 to 29	1 to 22
80	4 to 38	1 to 25
100	5 to 44	1 to 30

Symbol: A57 Note) Except flange type

Both the long shaft and short shaft are shortened.
· Applicable shaft type: J

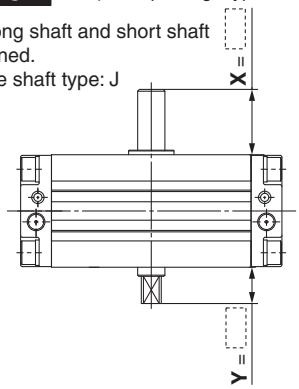

[mm]

Size	X	Y
30	3 to 25	3 to 10
50	3.5 to 36	1 to 20
63	3.5 to 41	1 to 22
80	4 to 50	1 to 25
100	5 to 60	1 to 30

Symbol: A58 Note) Except flange type

The rotation axis is reversed, and then shorten the long and short shafts.
· Applicable shaft types: J, T

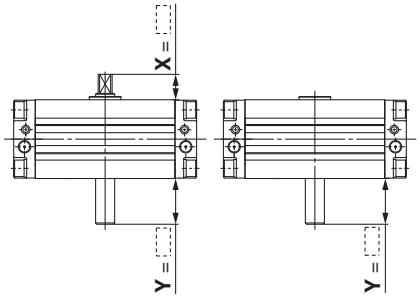

[mm]

Size	Y
50	1 to 36
63	1 to 41
80	1 to 50
100	1 to 60

Symbol: A59 Note) Except flange type

The rotation axis is reversed, and then shorten the long and short shafts.
· Applicable shaft type: X

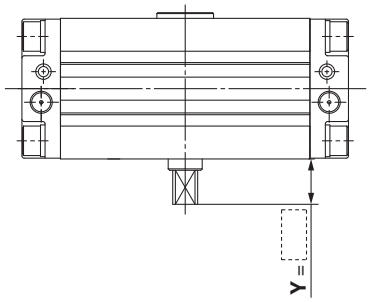

[mm]

Size	Y
50	1 to 27
63	1 to 29
80	1 to 38
100	1 to 44

Made to Order

Please contact SMC for further details about dimensions, specifications and delivery.

Made to Order

How to Order

C [D] RA1 [B] [S] [ ] [50] [ ] – [90] [ ] Z – [M9BW] [ ] – X [C8] [C30] [C59]

Magnet

—	None
D	Built-in magnet

Mounting

B	Basic type
L	Foot type
F	Flange type

Shaft type

S	Single shaft
W	Double shaft
X	Single shaft with four chamfers
Y	Double shaft with key
Z	Double shaft with four chamfers
T	Single round shaft
J	Double shaft (round shaft, with four chamfers)
K	Double round shaft

Variation

—	Without angle adjustment
U Note)	Angle adjustable type
H Note)	Air-hydro type

Note) Except size 30

Size

30
50
63
80
100

Port type

Size		30	50	63	80	100
—	M thread	M5	—	—	—	—
	Rc	—	1/8	1/8	1/4	3/8
TF	G	—				
TN	NPT	—				
TT	NPTF	—				

Rotating angle

90	90°
180	180°
100 Note)	100°
190 Note)	190°

Note) Except size 30

Cushion

—	Without air cushion
C Note)	With air cushion

Note) Except angle adjustable type, air-hydro type, size 30

Auto switch

—	Without auto switch (Built-in magnet)

Note 1) For applicable auto switch model, refer to page 5.
Note 2) Auto switches are shipped together, (but not assembled).

Number of auto switches

—	2 pcs.
S	1 pc.

Symbol for simple specials, made-to-order products

Note) Combination of XA is possible for up to 2 types.

• Combination 3 types: C7 C30 C59 → • Combination of applicable chart: Chart 7

Combination is available only when all the conditions are fulfilled in the combination chart.

Note 1) Combination of simple special and made-to-order is possible for up to 3 types.
Note 2) Above is the typical example of combination.

Combination Chart of Made to Order

Chart 7. Combination between -XC□ and -XC□

Symbol	Description	S	W	X	Y	Z	T	J	K	Applicable size	-XC7	-XC8 to -XC11	-XC30	-XC31 to -XC36	-XC37 to -XC46	-XC47 to -XC58	-XC59 to -XC61
-XC7	Reversed shaft	●	●	●	—	—	●	●	—	50, 63, 80, 100	-XC7						
-XC8 to -XC11	Change of rotation range	●	●	—	●	—	—	—	—		—	-XC8 to -XC11					
-XC30	Changed to fluorine grease	●	●	●	●	●	●	●	●	30 to 100	S,W,X,T,J*	S,W,Y*	-XC30				
-XC31 to -XC36	Change of rotation range and shaft rotation direction	●	●	—	●	—	—	—	—	50, 63, 80, 100	—	—	S,W,Y*	-XC31 to -XC36			
-XC37 to -XC46	Change of rotation range and angle adjusting direction	●	●	—	●	—	—	—	—		—	—	S,W,Y*	—	-XC37 to -XC46		
-XC47 to -XC58	Change of rotation range and angle adjusting direction (Angle adjusting screw is equipped on the left.)	●	●	—	●	—	—	—	—		—	—	—	—	—	-XC47 to -XC58	
-XC59 to -XC61	Change of port location	●	●	●	●	●	●	●	●	30 to 100	S,W,Y*	●	S,W,Y*	S,W,Y*	S,W,Y*	S,W,Y*	-XC59 to -XC61
-XC63	One side air-hydro, One side air	●	●	●	●	●	●	●	●	50, 63, 80, 100	●	●	—	●	—	—	●
-XC64	One side air-hydro, One side air	●	●	●	●	●	●	●	●		●	●	—	●	—	—	●

∗ -XC8 to -XC11 and -XC31 to -XC36 are only the standard type. ∗ -XC37 to -XC46 and -XC47 to -XC58 are only the angle adjustable type.
∗ -XC63 and -XC64 are only the air-hydro type.

Chart 8. Combination between -X□, -XC□

Symbol	Description	S	W	X	Y	Z	T	J	K	Applicable size	-XC7	-XC8 to -XC11	-XC30	-XC31 to -XC36	-XC37 to -XC58	-XC59 to -XC61	-XC63	-XC64
-X6	Stainless steel shaft/bolt, etc.	●	●	●	●	●	●	●	●	30 to 100	●	●	●	●	—	●	●	●
-X7	Heat resistant (100 °C)	●	●	●	●	●	●	●	●		●	●	—	●	●	●	—	—
-X10	Both sides angle adjustable	●	●	●	●	●	●	●	●	50 to 100	●	—	●	—	—	●	—	—
-X11	One side angle adjustable, One side with cushion	●	●	●	●	●	●	●	●		●	—	—	—	—	●	—	—
-X16	Fluororubber seal	●	●	●	●	●	●	●	●	30 to 100	●	●	●	●	●	●	—	—

∗ -X10 and -X11 are only the angle adjustable type.

1 Reversed Shaft — Symbol -XC7

C□RA1
C□RA1□□U | Standard model no. | -XC7

Reversed shaft (-XC7)

Specifications

Applicable size	50, 63, 80, 100
Applicable shaft type	S, W, X, T, J

Symbol: C7

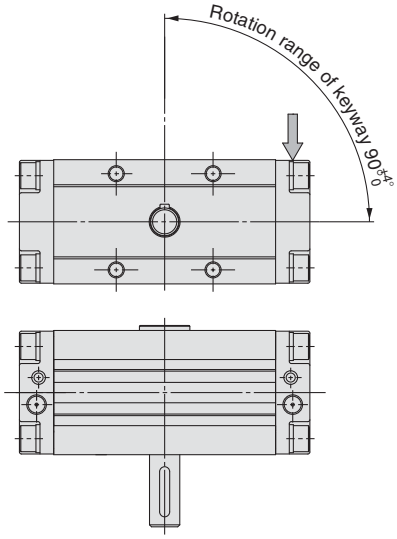

Note) If it is pressurised from the port indicated with the arrow, the shaft rotates in the clockwise direction.

2 Change of Rotation Range — Symbol -XC8 to -XC11

C□RA1 | Standard model no. | -XC8

Change of rotation range (-XC8 to -XC11)

Specifications

Applicable size	50, 63, 80, 100
Applicable shaft type	S, W, Y

Symbol: C8

Change of rotation range

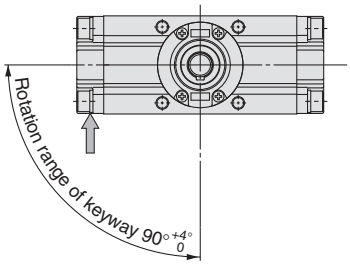

Note) If it is pressurised from the port indicated with the arrow, the shaft rotates in the clockwise direction.

Symbol: C9

Change of rotation range

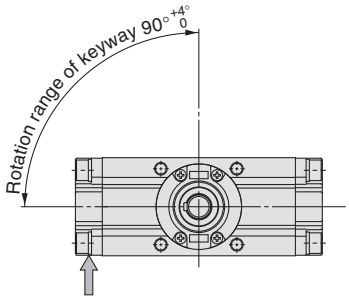

Note) If it is pressurised from the port indicated with the arrow, the shaft rotates in the clockwise direction.

Symbol: C10

Change of rotation range

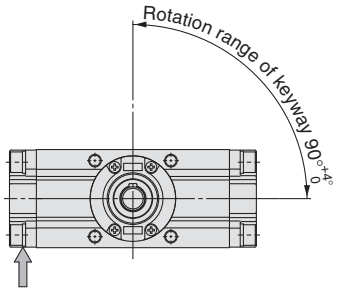

Note) If it is pressurised from the port indicated with the arrow, the shaft rotates in the clockwise direction.

Symbol: C11

Change of rotation range

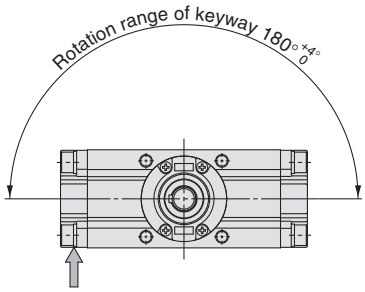

Note) If it is pressurised from the port indicated with the arrow, the shaft rotates in the clockwise direction.

3 Changed to Fluorine Grease — Symbol -XC30

C□RA1
C□RA1□□U | Standard model no. | -XC30

Fluorine grease (-XC30)

Lubricant oil in the seal parts and inner wall of the cylinder is changed to fluorine grease. (Not the low-speed specification)

Specifications

Applicable size	30, 50, 63, 80, 100
Applicable shaft type	S, W, X, Y, Z, T, J, K

∗ Refer to standard type and angle adjustable type for other specifications.

4 Change of Rotation Range and Shaft Rotation Direction

Symbol
-XC31 to -XC36

C□RA1 | **Standard model no.** | **-XC31**

Specifications

Applicable size	**50, 63, 80, 100**
Applicable shaft type	S, W, Y

Change of rotation range and shaft rotation direction (-XC31 to -XC36)

Symbol: C31

The rotation range is changed and the rotating direction is reversed.

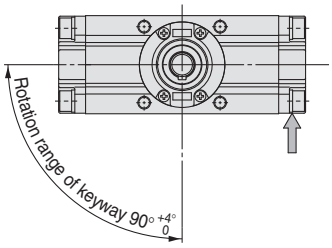

Note) If it is pressurised from the port indicated with the arrow, the shaft rotates in the clockwise direction.

Symbol: C32

The rotation range is changed and the rotating direction is reversed.

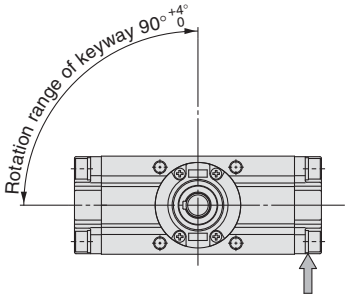

Note) If it is pressurised from the port indicated with the arrow, the shaft rotates in the clockwise direction.

Symbol: C33

The rotation range is changed and the rotating direction is reversed.

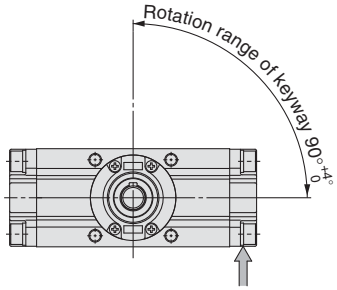

Note) If it is pressurised from the port indicated with the arrow, the shaft rotates in the clockwise direction.

Symbol: C34

The rotation range is changed and the rotating direction is reversed.

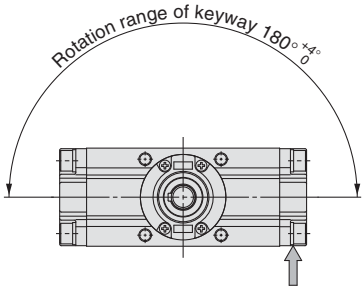

Note) If it is pressurised from the port indicated with the arrow, the shaft rotates in the clockwise direction.

Symbol: C35

The rotation range is changed and the rotating direction is reversed.

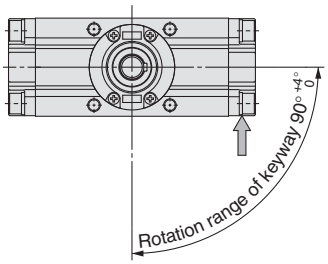

Note) If it is pressurised from the port indicated with the arrow, the shaft rotates in the clockwise direction.

Symbol: C36

The rotation range is changed and the rotating direction is reversed.

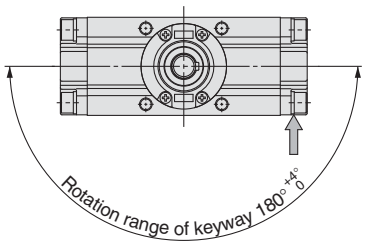

Note) If it is pressurised from the port indicated with the arrow, the shaft rotates in the clockwise direction.

5 Change of Rotation Range and Angle Adjusting Direction

Symbol
-XC37 to -XC42

C□RA1□□U | **Standard model no.** | **-XC37**

●**Change of rotation range and angle adjusting direction (-XC37 to -XC42)**

Specifications

Applicable size	**50, 63, 80, 100**
Applicable shaft type	S, W, Y

Symbol: C37

The rotation range and the angle adjusting direction of the angle adjustable type are changed.

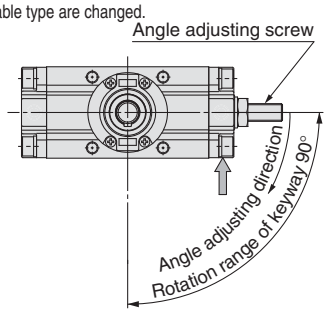

The rotation range under the adjustment of an angle at 60° is indicated below.

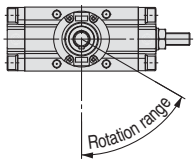

Note) If it is pressurised from the port indicated with the arrow, the shaft rotates in the clockwise direction.

Symbol: C38

The rotation range and the angle adjusting direction of the angle adjustable type are changed.

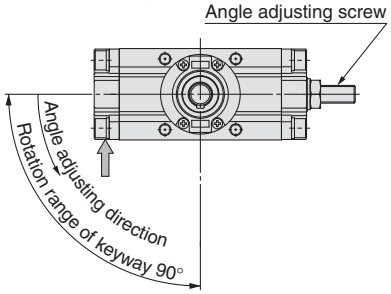

The rotation range under the adjustment of an angle at 60° is indicated below.

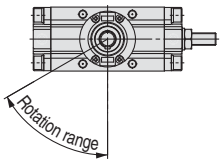

Note) If it is pressurised from the port indicated with the arrow, the shaft rotates in the clockwise direction.

Symbol: C39

The rotation range and the angle adjusting direction of the angle adjustable type are changed.

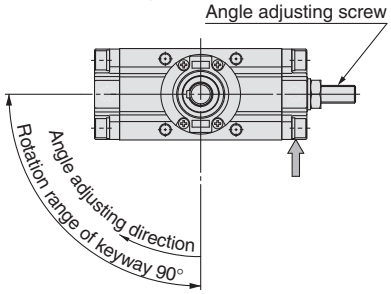

The rotation range under the adjustment of an angle at 60° is indicated below.

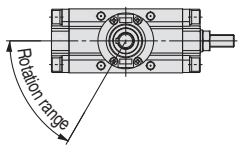

Note) If it is pressurised from the port indicated with the arrow, the shaft rotates in the clockwise direction.

Symbol: C40

The rotation range and the angle adjusting direction of the angle adjustable type are changed.

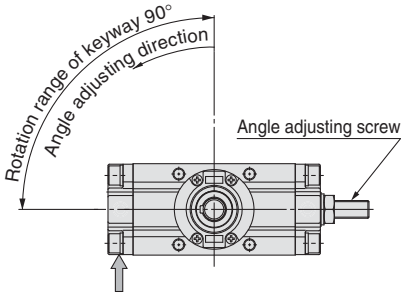

The rotation range under the adjustment of an angle at 60° is indicated below.

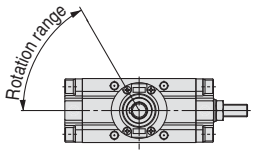

Note) If it is pressurised from the port indicated with the arrow, the shaft rotates in the clockwise direction.

Symbol: C41

The rotation range and the angle adjusting direction of the angle adjustable type are changed.

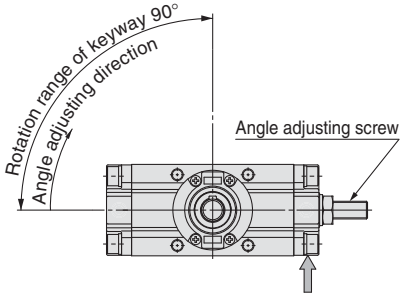

The rotation range under the adjustment of an angle at 60° is indicated below.

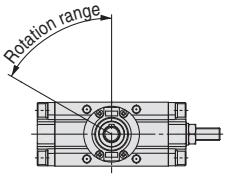

Note) If it is pressurised from the port indicated with the arrow, the shaft rotates in the clockwise direction.

Symbol: C42

The rotation range and the angle adjusting direction of the angle adjustable type are changed.

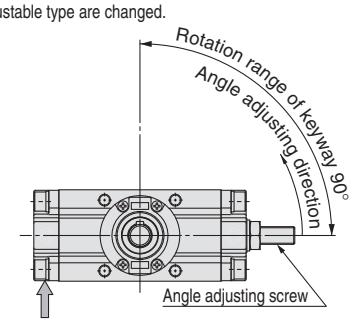

The rotation range under the adjustment of an angle at 60° is indicated below.

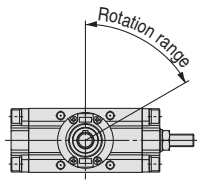

Note) If it is pressurised from the port indicated with the arrow, the shaft rotates in the clockwise direction.

6 Change of Rotation Range and Angle Adjusting Direction

Symbol
-XC43 to -XC46

C□RA1□□U | **Standard model no.** | **-XC43**

●**Change of rotation range and angle adjusting direction (-XC43 to -XC46)**

Specifications

Applicable size	**50, 63, 80, 100**
Applicable shaft type	S, W, Y

Symbol: C43

The rotation range and the angle adjusting direction of the angle adjustable type are changed.

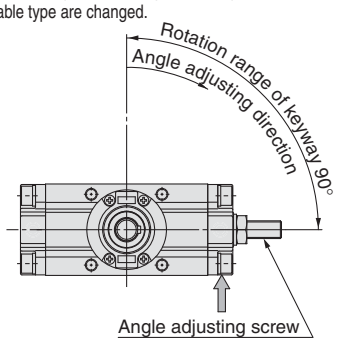

The rotation range under the adjustment of an angle at 60° is indicated below.

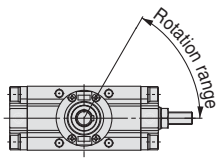

Note) If it is pressurised from the port indicated with the arrow, the shaft rotates in the clockwise direction.

Symbol: C44

The rotation range and the angle adjusting direction of the angle adjustable type are changed.

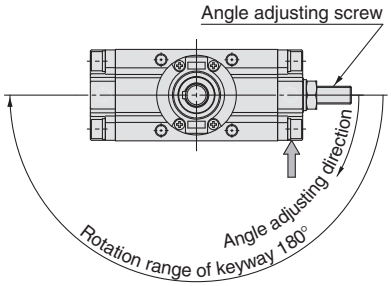

The rotation range under the adjustment of an angle at 120° is indicated below.

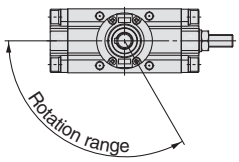

Note) If it is pressurised from the port indicated with the arrow, the shaft rotates in the clockwise direction.

Symbol: C45

The rotation range and the angle adjusting direction of the angle adjustable type are changed.

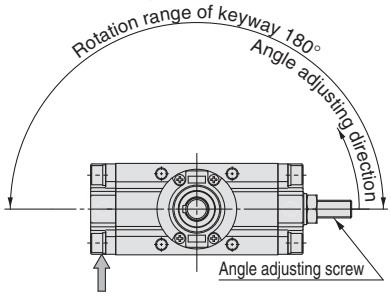

The rotation range under the adjustment of an angle at 120° is indicated below.

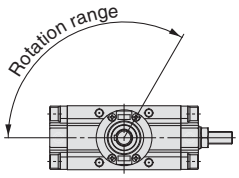

Note) If it is pressurised from the port indicated with the arrow, the shaft rotates in the clockwise direction.

Symbol: C46

The rotation range and the angle adjusting direction of the angle adjustable type are changed.

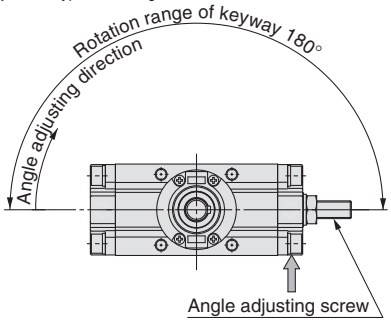

The rotation range under the adjustment of an angle at 120° is indicated below.

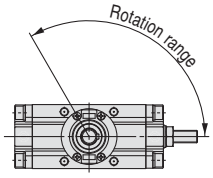

Note) If it is pressurised from the port indicated with the arrow, the shaft rotates in the clockwise direction.

7 Change of Rotation Range and Angle Adjusting Direction (Angle adjusting screw is equipped on the left.)

Symbol
-XC47 to -XC52

C□RA1□□U | **Standard model no.** | **-XC47**

●**Change of rotation range and angle adjusting direction (Angle adjusting screw is equipped on the left.) (-XC47 to -XC52)**

Specifications

Applicable size	**50, 63, 80, 100**
Applicable shaft type	S, W, Y

Symbol: C47

For the angle adjusting type, angle adjusting screws are mounted to the left cover.

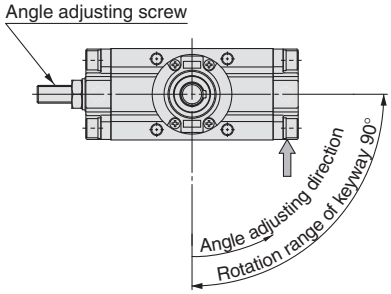

The rotation range under the adjustment of an angle at 60° is indicated below.

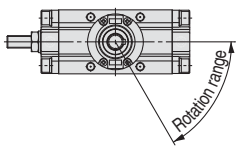

Note) If it is pressurised from the port indicated with the arrow, the shaft rotates in the clockwise direction.

Symbol: C48

For the angle adjusting type, angle adjusting screws are mounted to the left cover.

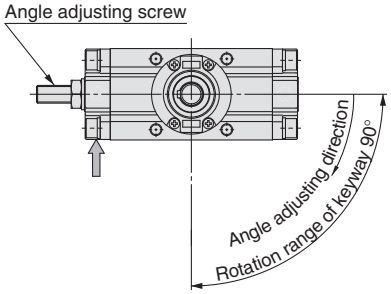

The rotation range under the adjustment of an angle at 60° is indicated below.

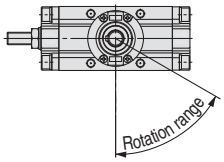

Note) If it is pressurised from the port indicated with the arrow, the shaft rotates in the clockwise direction.

Symbol: C49

For the angle adjusting type, angle adjusting screws are mounted to the left cover.

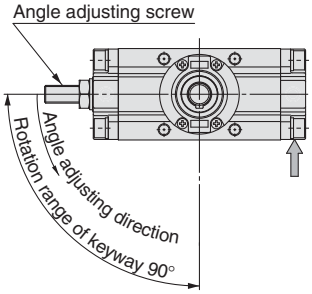

The rotation range under the adjustment of an angle at 60° is indicated below.

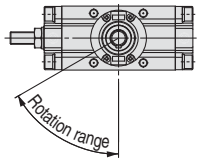

Note) If it is pressurised from the port indicated with the arrow, the shaft rotates in the clockwise direction.

Symbol: C50

For the angle adjusting type, angle adjusting screws are mounted to the left cover.

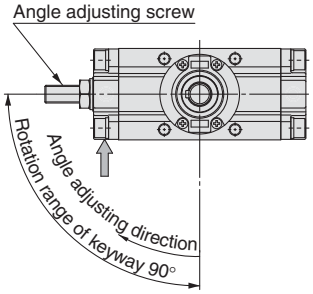

The rotation range under the adjustment of an angle at 60° is indicated below.

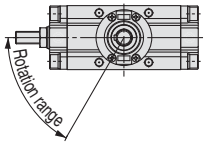

Note) If it is pressurised from the port indicated with the arrow, the shaft rotates in the clockwise direction.

Symbol: C51

For the angle adjusting type, angle adjusting screws are mounted to the left cover.

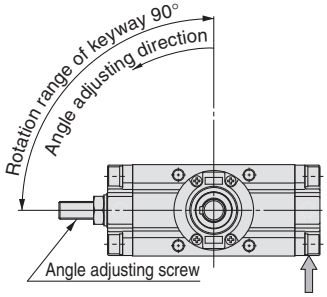

The rotation range under the adjustment of an angle at 60° is indicated below.

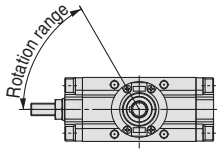

Note) If it is pressurised from the port indicated with the arrow, the shaft rotates in the clockwise direction.

Symbol: C52

For the angle adjusting type, angle adjusting screws are mounted to the left cover.

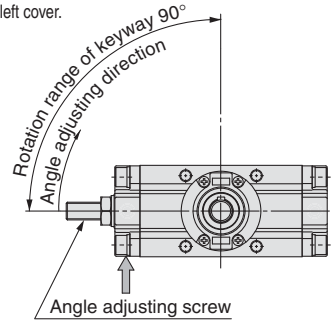

The rotation range under the adjustment of an angle at 60° is indicated below.

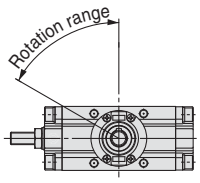

Note) If it is pressurised from the port indicated with the arrow, the shaft rotates in the clockwise direction.

8 Change of Rotation Range and Angle Adjusting Direction (Angle adjusting screw is equipped on the left.)

Symbol
-XC53 to -XC58

C□RA1□□U | **Standard model no.** | **-XC53**

●**Change of rotation range and angle adjusting direction (Angle adjusting screw is equipped on the left.) (-XC53 to -XC58)**

Specifications

Applicable size	**50, 63, 80, 100**
Applicable shaft type	S, W, Y

Symbol: C53

For the angle adjusting type, angle adjusting screws are mounted to the left cover.

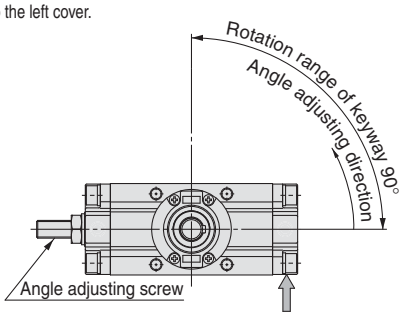

The rotation range under the adjustment of an angle at 60° is indicated below.

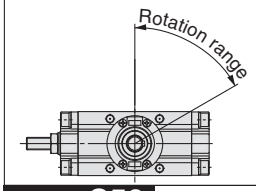

Note) If it is pressurised from the port indicated with the arrow, the shaft rotates in the clockwise direction.

Symbol: C54

For the angle adjusting type, angle adjusting screws are mounted to the left cover.

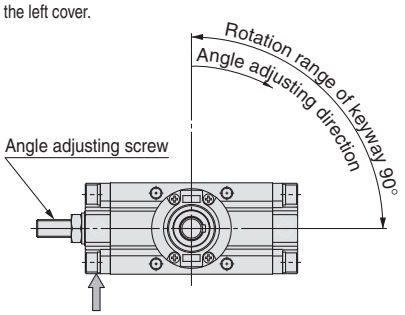

The rotation range under the adjustment of an angle at 60° is indicated below.

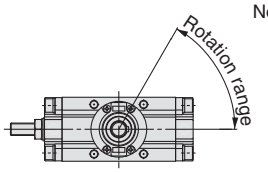

Note) If it is pressurised from the port indicated with the arrow, the shaft rotates in the clockwise direction.

Symbol: C55

For the angle adjusting type, angle adjusting screws are mounted to the left cover.

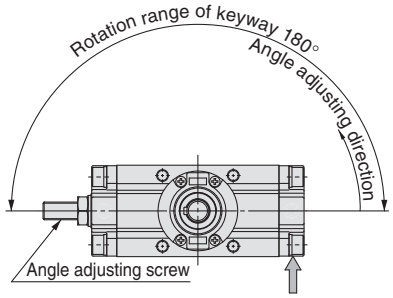

The rotation range under the adjustment of an angle at 120° is indicated below.

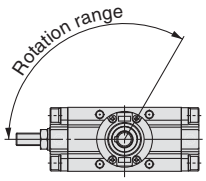

Note) If it is pressurised from the port indicated with the arrow, the shaft rotates in the clockwise direction.

Symbol: C56

For the angle adjusting type, angle adjusting screws are mounted to the left cover.

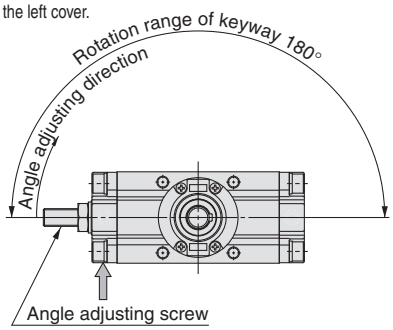

The rotation range under the adjustment of an angle at 120° is indicated below.

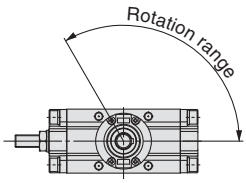

Note) If it is pressurised from the port indicated with the arrow, the shaft rotates in the clockwise direction.

Symbol: C57

For the angle adjusting type, angle adjusting screws are mounted to the left cover.

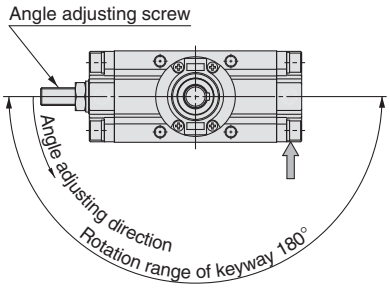

The rotation range under the adjustment of an angle at 120° is indicated below.

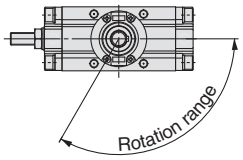

Note) If it is pressurised from the port indicated with the arrow, the shaft rotates in the clockwise direction.

Symbol: C58

For the angle adjusting type, angle adjusting screws are mounted to the left cover.

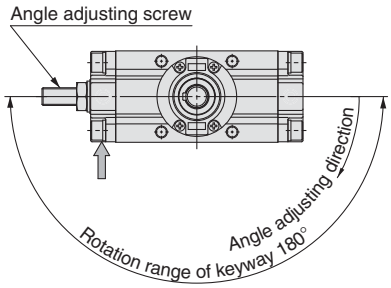

The rotation range under the adjustment of an angle at 120° is indicated below.

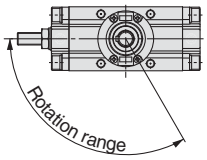

Note) If it is pressurised from the port indicated with the arrow, the shaft rotates in the clockwise direction.

9 Change of Port Location (Mounting location of the cover is changed.)

Symbol
-XC59 to -XC61

C□RA1
C□RA1□□U

Standard model no.	-XC59

- **Change of port location (Mounting location of the cover is changed.) (-XC59 to -XC61)**

Specifications

Applicable size	30, 50, 63, 80, 100
Applicable shaft type	S, W, X, Y Z, T, J, K

Symbol: C59

Direction of the port is changed. (Upward)

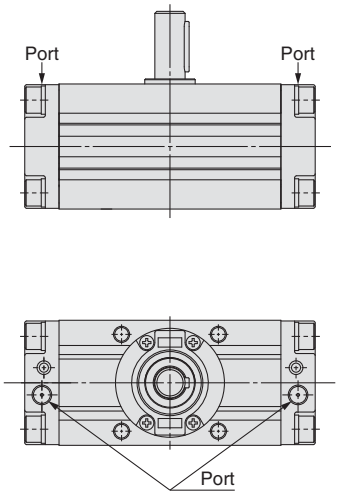

Symbol: C60

Direction of the port is changed. (Downward)

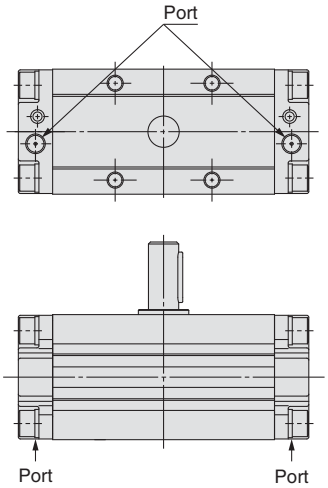

Symbol: C61

Direction of the port is changed. (Backward)

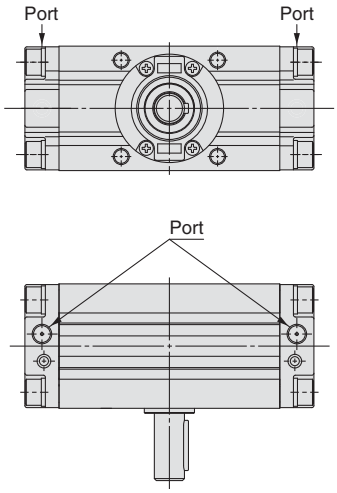

10 One Side Air-hydro, One Side Air

Symbol
-XC63, -XC64

C□RA1

Standard model no.	-XC63

- **One side air-hydro, One side air**
  -XC63: Left side air
  Right side air-hydro
  -XC64: Left side air-hydro
  Right side air

Specifications

Applicable size	50, 63, 80, 100
Applicable shaft type	S, W, X, Y Z, T, J, K

∗ Except angle adjustable type and air cushion equipped type

Symbol: C63

One side air, one side air-hydro specification (Left side air, Right side hydro)

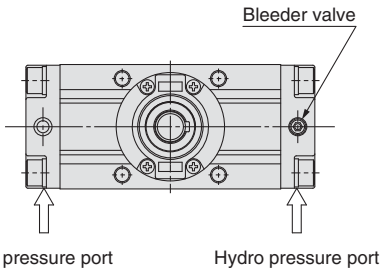

The figure shows the pressurised situation to the hydro pressure port.

Symbol: C64

One side air, one side air-hydro specification (Left side hydro, Right side air)

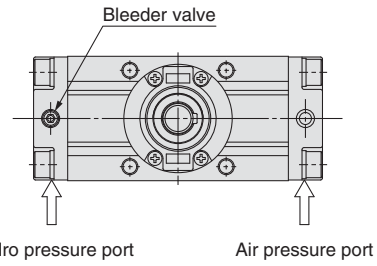

The figure shows the pressurised situation to the air pressure port.

11 Stainless Steel Shaft/Bolt/Parallel Key — Symbol -X6

C□RA1 | Standard model no. | -X6

Stainless steel for main part

For applications in areas that pose a risk of rust or corrosion, a portion of the materials used in the standard parts has been changed to stainless steel.

Specifications

Type	Pneumatic, Air-hydro
Size	**30, 50, 63, 80, 100**
Rotating angle	90°, 180° (Size 30 to 100) 100°, 190° (Size 50 to 100)
Mounting	Flange, Foot
Shaft type	Single shaft (S), Double shaft (W), Single shaft with four chamfers (X), Double shaft with key (Y), Double shaft with four chamfers (Z), Single round shaft (T), Double shaft (round shaft, with four chamfers) (J), Double round shaft (K)
Stainless steel part	Shaft, Bolt, Screw, Parallel key
Cushion	Not attached, Air cushion (Except air-hydro type)
Auto switch	Mountable

∗ Refer to page 5 for other specifications.
∗∗ Except angle adjustable type
∗∗∗ Only single shaft (S) and double shaft (W) types are applicable to flange type.

12 Heat Resistant — Symbol -X7

CRA1 | Standard model no. | -X7

Heat resistant

In this rotary actuator, the material of the seals has been changed to the heat resistant type (to withstand up to 100 °C), for applications in environments that exceed the standard specification temperatures of 0 to 60 °C.

Specifications

Type	Pneumatic
Size	**30, 50, 63, 80, 100**
Rotating angle	90°, 180° (Size 30 to 100) 100°, 190° (Size 50 to 100)
Ambient and fluid temperature	0 to 100 °C
Mounting	Flange, Foot
Shaft type	Single shaft (S), Double shaft (W), Single shaft with four chamfers (X), Double shaft with key (Y), Double shaft with four chamfers (Z), Single round shaft (T), Double shaft (round shaft, with four chamfers) (J), Double round shaft (K)
Seal material	FKM
Cushion	Size 30: None Size 50 to 100: Not attached, Air cushion
Auto switch	Not mountable

∗ Refer to page 5 for other specifications.

13 Both Sides Angle Adjustable — Symbol -X10

C□RA1□□U | Standard model no. | -X10

Both sides angle adjustable

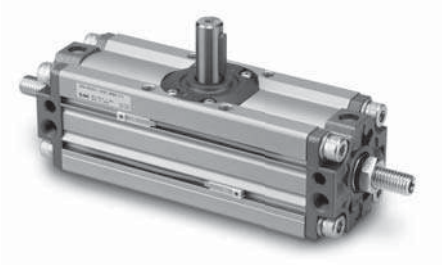

Specifications

Type	Pneumatic
Size	**50, 63, 80, 100**
Rotating angle	90°, 180°, 100°, 190°
Mounting	Flange, Foot
Shaft type	Single shaft (S), Double shaft (W), Single shaft with four chamfers (X), Double shaft with key (Y), Double shaft with four chamfers (Z), Single round shaft (T), Double shaft (round shaft, with four chamfers) (J), Double round shaft (K)
Cushion	None
Angle adjustment range	Max. 90° (One side)

∗ Refer to page 15 for other specifications.

Adjusting direction Adjusting direction "A": When angle adjusting screw on "A" side is screwed into the right direction.
Adjusting direction "B": When angle adjusting screw on "B" side is screwed into the right direction.

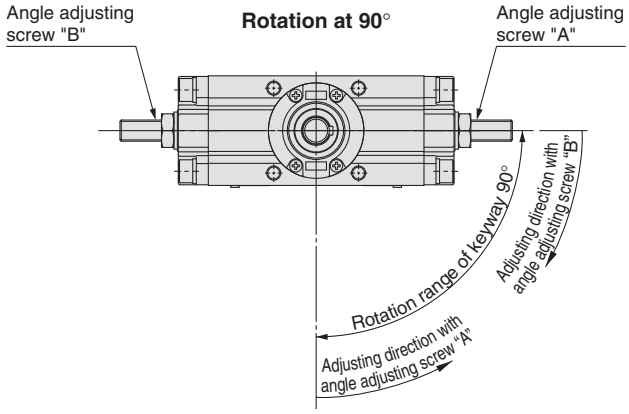

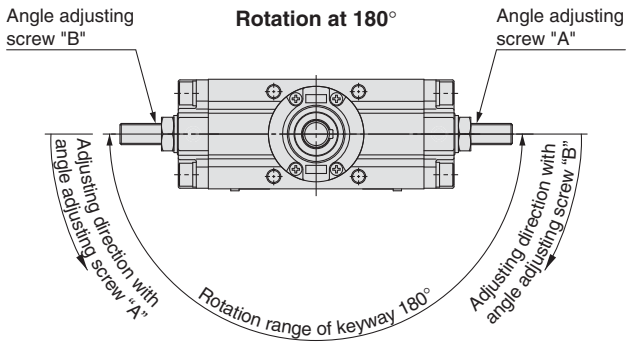

14 One Side Angle Adjustable, One Side with Cushion — Symbol -X11

C□RA1□□U | **Standard model no.** | **-X11**

One side angle adjustable
One side with cushion

Specifications

Type	Pneumatic
Size	**50, 63, 80, 100**
Rotating angle	90°, 180°, 100°, 190°
Mounting	Flange, Foot
Shaft type	Single shaft (S), Double shaft (W), Single shaft with four chamfers (X), Double shaft with key (Y), Double shaft with four chamfers (Z), Single round shaft (T), Double shaft (round shaft, with four chamfers) (J), Double round shaft (K)
Cushion	With cushion on one side
Angle adjustment range	Max. 90°

∗ Refer to page 15 for other specifications.

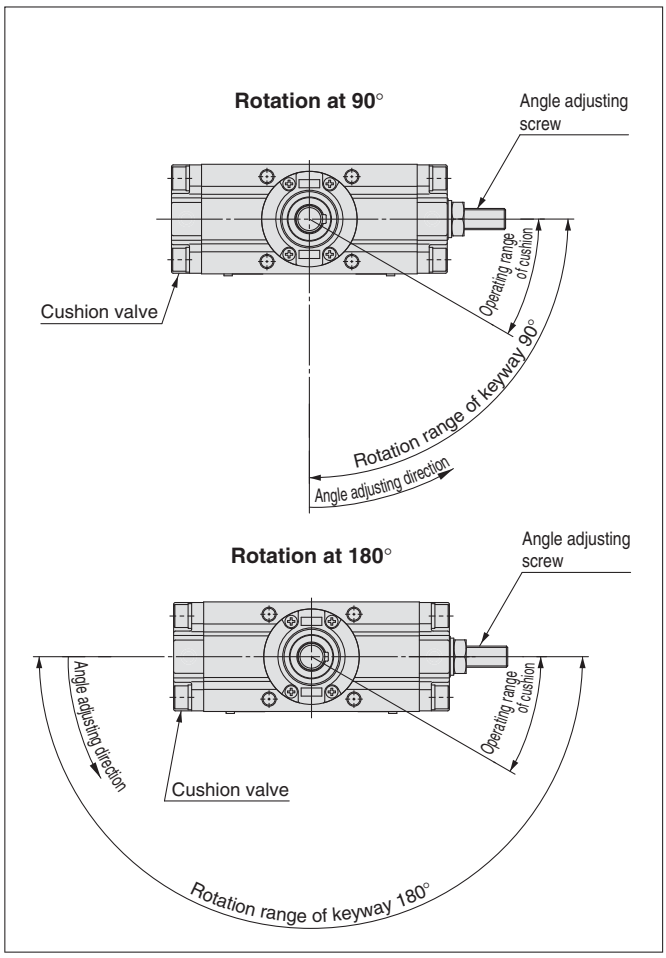

∗ Refer to page 17 for dimensions.

15 Fluororubber Seal — Symbol -X16

CDRA1 | **Standard model no.** | **-X16**

Fluororubber seal

Seal is now changed to fluororubber.

Specifications

Type	Pneumatic
Size	**30, 50, 63, 80, 100**
Rotating angle	90°, 180° (Size 30 to 100) 100°, 190° (Size 50 to 100)
Ambient and fluid temperature	0 to 60 °C (No freezing)
Mounting	Flange, Foot
Shaft type	Single shaft (S), Double shaft (W), Single shaft with four chamfers (X), Double shaft with key (Y), Double shaft with four chamfers (Z), Single round shaft (T), Double shaft (round shaft, with four chamfers) (J), Double round shaft (K)
Seal material	FKM
Cushion	Not attached, Air cushion
Auto switch	Mountable

∗ Refer to page 5 for other specifications.
∗∗ For built-in magnet type only.

Made to Order: -X6 to -X16

Made to Order

How to Order

C D RA1 B S □ 50 □ – 90 □ Z – M9BW □ – X6 – X16

Magnet

—	None
D	Built-in magnet

Mounting

B	Basic type
L	Foot type
F	Flange type

Shaft type

S	Single shaft
W	Double shaft
X	Single shaft with four chamfers
Y	Double shaft with key
Z	Double shaft with four chamfers
T	Single round shaft
J	Double shaft (round shaft, with four chamfers)
K	Double round shaft

Variation

—	Without angle adjustment
U Note)	Angle adjustable type
H Note)	Air-hydro type

Note) Except size 30

Size

30
50
63
80
100

Port type

Size		30	50	63	80	100
—	M thread	M5	—	—	—	—
	Rc	—	1/8	1/8	1/4	3/8
TF	G	—				
TN	NPT	—				
TT	NPTF	—				

Rotating angle

90	90°
180	180°
100 Note)	100°
190 Note)	190°

Note) Except size 30

Cushion

—	Without air cushion
C Note)	With air cushion

Note) Except angle adjustable type, air-hydro type

Auto switch

—	Without auto switch (Built-in magnet)

Note 1) For applicable auto switch model, refer to page 5.
Note 2) Auto switches are shipped together, (but not assembled).

Number of auto switches

—	2 pcs.
S	1 pc.

Made to Order

• Combination is available only when all the conditions are fulfilled in the combination chart 9.

Note 1) Combination of made-to-order -X is possible for up to 2 types.
Note 2) Above is the typical example of combination.

Combination Chart of Made to Order

Chart 9. Combination between -X□ and -X□ (S, W, X, Y, Z, T, J, K shaft)

Symbol	Description	Applicable shaft type								Applicable size	Combination		
		S	W	X	Y	Z	T	J	K				
-X6	Stainless steel shaft/bolt/parallel key	●	●	●	●	●	●	●	●	30 to 100	-X6		
-X7 Note)	Heat resistant (100 °C)	●	●	●	●	●	●	●	●		●	-X7	
-X10	Both sides angle adjustable	●	●	●	●	●	●	●	●	50 to 100	—	●	
-X11	One side angle adjustable, One side with cushion	●	●	●	●	●	●	●	●		—	●	-X10 to -X11
-X16	Fluororubber seal	●	●	●	●	●	●	●	●	30 to 100	●	—	●

∗ X7: Not available for the built-in magnet type.

Specific Product Precautions

Be sure to read this before handling. Refer to the back cover for Safety Instructions. For Rotary Actuator Precautions and Auto Switch Precautions, refer to "Handling Precautions for SMC Products" and the Operation Manual on SMC website, http://www.smcworld.com

How to Use the Air-hydro Type

Caution on Design

⚠ Warning

1. Do not use a rotary actuator of the air-hydro type near flames, or in equipment or machinery that exceeds an ambient temperatures of 60 °C.

There is a danger of causing a fire because the rotary actuator of the air-hydro type uses a flammable hydraulic fluid.

⚠ Caution

1. Do not use in an environment, equipment, or machine that is not compatible with oil mist.

Rotary actuators of the air-hydro types generate an oil mist during operation which may affect the environment.

2. Be sure to install an exhaust cleaner on the directional control valve for the rotary actuator of the air-hydro type.

A very small amount of hydraulic fluid is discharged from the exhaust port of the rotary actuator of the air-hydro type's directional control valve, which may contaminate the surrounding area.

3. Install a rotary actuator of the air-hydro type in locations where it can be serviced easily.

Since the rotary actuator of the air-hydro type requires maintenance, such as refilling of hydraulic fluid and bleeding of air, ensure sufficient space for these activities.

4. Do not use in cases where external leakage of hydraulic oil may adversely affect equipment or machinery.

Although it only occurs in minute amounts, a certain amount of sliding leakage from the piston seal is unavoidable with the rotary actuator of the air-hydro type. Because of the construction of the rotary actuator of the air-hydro type, hydraulic oil may leak into the outside due to sliding leakage.

Selection

⚠ Caution

1. Select the rotary actuator of the air-hydro type based on the combination with the air-hydro unit.

Select a proper air-hydro unit that is necessary for good operation of the rotary actuator of the air-hydro type.

Piping

⚠ Caution

1. Use self-align fittings in conjunction with the piping for the rotary actuator of the air-hydro type.

Do not use a one-touch fitting with the piping for the rotary actuator of the air-hydro type, as this may result in oil leakage.

Piping

⚠ Caution

2. For rotary actuator of the air-hydro type piping, use hard nylon tubing or copper piping.

As in the case of hydraulic circuits, surge pressures greater than the operating pressure may occur in a rotary actuator of the air-hydro type's piping, making it necessary to use safer piping materials.

Lubrication

⚠ Warning

1. Make sure to completely discharge the compressed air in the system before filling the air-hydro unit with hydraulic oil.

When supplying hydraulic fluid to the air-hydro unit, first confirm that safety measures are implemented to prevent dropping of objects and the release of clamped objects, etc. Then, shut off the air supply and the equipment's electric power and exhaust the compressed air in the system.

If the air-hydro unit's supply port is opened with compressed air still remaining in the system, there is a danger of hydraulic fluid being blown out.

Maintenance

⚠ Caution

1. Bleed air from the rotary actuator of the air-hydro type on a regular basis.

Since air may accumulate inside a rotary actuator of the air-hydro type, bleed air from it, for example before starting work. Bleed air from a bleeder valve provided on the rotary actuator of the air-hydro type or the piping.

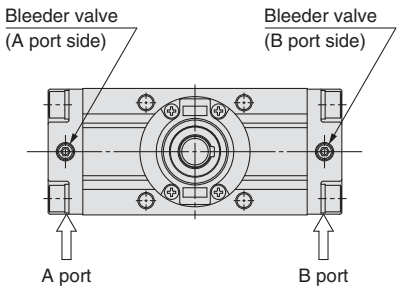

2. Verify the oil level of the air-hydro system on a regular basis.

Since a very small amount of hydraulic fluid is discharged from the rotary actuator of the air-hydro type and air-hydro unit circuit, the fluid will gradually decrease. Therefore, check the fluid regularly and refill as necessary.

The oil level can be checked with a level gauge in the air-hydro converter.

⚠ Safety Instructions

These safety instructions are intended to prevent hazardous situations and/or equipment damage. These instructions indicate the level of potential hazard with the labels of **"Caution," "Warning"** or **"Danger."** They are all important notes for safety and must be followed in addition to International Standards (ISO/IEC)*1), and other safety regulations.

⚠ Caution: **Caution** indicates a hazard with a low level of risk which, if not avoided, could result in minor or moderate injury.

⚠ Warning: **Warning** indicates a hazard with a medium level of risk which, if not avoided, could result in death or serious injury.

⚠ Danger : **Danger** indicates a hazard with a high level of risk which, if not avoided, will result in death or serious injury.

*1) ISO 4414: Pneumatic fluid power – General rules relating to systems.
ISO 4413: Hydraulic fluid power – General rules relating to systems.
IEC 60204-1: Safety of machinery – Electrical equipment of machines. (Part 1: General requirements)
ISO 10218-1: Manipulating industrial robots - Safety.
etc.

⚠ Warning

1. The compatibility of the product is the responsibility of the person who designs the equipment or decides its specifications.
Since the product specified here is used under various operating conditions, its compatibility with specific equipment must be decided by the person who designs the equipment or decides its specifications based on necessary analysis and test results. The expected performance and safety assurance of the equipment will be the responsibility of the person who has determined its compatibility with the product. This person should also continuously review all specifications of the product referring to its latest catalogue information, with a view to giving due consideration to any possibility of equipment failure when configuring the equipment.

2. Only personnel with appropriate training should operate machinery and equipment.
The product specified here may become unsafe if handled incorrectly. The assembly, operation and maintenance of machines or equipment including our products must be performed by an operator who is appropriately trained and experienced.

3. Do not service or attempt to remove product and machinery/equipment until safety is confirmed.
1. The inspection and maintenance of machinery/equipment should only be performed after measures to prevent falling or runaway of the driven objects have been confirmed.
2. When the product is to be removed, confirm that the safety measures as mentioned above are implemented and the power from any appropriate source is cut, and read and understand the specific product precautions of all relevant products carefully.
3. Before machinery/equipment is restarted, take measures to prevent unexpected operation and malfunction.

4. Contact SMC beforehand and take special consideration of safety measures if the product is to be used in any of the following conditions.
1. Conditions and environments outside of the given specifications, or use outdoors or in a place exposed to direct sunlight.
2. Installation on equipment in conjunction with atomic energy, railways, air navigation, space, shipping, vehicles, military, medical treatment, combustion and recreation, or equipment in contact with food and beverages, emergency stop circuits, clutch and brake circuits in press applications, safety equipment or other applications unsuitable for the standard specifications described in the product catalogue.
3. An application which could have negative effects on people, property, or animals requiring special safety analysis.
4. Use in an interlock circuit, which requires the provision of double interlock for possible failure by using a mechanical protective function, and periodical checks to confirm proper operation.

Limited warranty and Disclaimer/ Compliance Requirements

The product used is subject to the following "Limited warranty and Disclaimer" and "Compliance Requirements".
Read and accept them before using the product.

Limited warranty and Disclaimer

1. The warranty period of the product is 1 year in service or 1.5 years after the product is delivered, wichever is first.*2)
Also, the product may have specified durability, running distance or replacement parts. Please consult your nearest sales branch.
2. For any failure or damage reported within the warranty period which is clearly our responsibility, a replacement product or necessary parts will be provided.
This limited warranty applies only to our product independently, and not to any other damage incurred due to the failure of the product.
3. Prior to using SMC products, please read and understand the warranty terms and disclaimers noted in the specified catalogue for the particular products.

***2) Vacuum pads are excluded from this 1 year warranty.**
A vacuum pad is a consumable part, so it is warranted for a year after it is delivered.
Also, even within the warranty period, the wear of a product due to the use of the vacuum pad or failure due to the deterioration of rubber material are not covered by the limited warranty.

Compliance Requirements

1. The use of SMC products with production equipment for the manufacture of weapons of mass destruction (WMD) or any other weapon is strictly prohibited.
2. The exports of SMC products or technology from one country to another are governed by the relevant security laws and regulations of the countries involved in the transaction. Prior to the shipment of a SMC product to another country, assure that all local rules governing that export are known and followed.

⚠ Caution

1. The product is provided for use in manufacturing industries.
The product herein described is basically provided for peaceful use in manufacturing industries.
If considering using the product in other industries, consult SMC beforehand and exchange specifications or a contract if necessary.
If anything is unclear, contact your nearest sales branch.

⚠ Caution

SMC products are not intended for use as instruments for legal metrology.
Measurement instruments that SMC manufactures or sells have not been qualified by type approval tests relevant to the metrology (measurement) laws of each country. Therefore, SMC products cannot be used for business or certification ordained by the metrology (measurement) laws of each country.

⚠ Safety Instructions Be sure to read "Handling Precautions for SMC Products" (M-E03-3) before using.

SMC Corporation (Europe)

Austria	☎ +43 (0)2262622800	www.smc.at	office@smc.at
Belgium	☎ +32 (0)33551464	www.smcpneumatics.be	info@smcpneumatics.be
Bulgaria	☎ +359 (0)2807670	www.smc.bg	office@smc.bg
Croatia	☎ +385 (0)13707288	www.smc.hr	office@smc.hr
Czech Republic	☎ +420 541424611	www.smc.cz	office@smc.cz
Denmark	☎ +45 70252900	www.smcdk.com	smc@smcdk.com
Estonia	☎ +372 6510370	www.smcpneumatics.ee	smc@smcpneumatics.ee
Finland	☎ +358 207513513	www.smc.fi	smcfi@smc.fi
France	☎ +33 (0)164761000	www.smc-france.fr	info@smc-france.fr
Germany	☎ +49 (0)61034020	www.smc.de	info@smc.de
Greece	☎ +30 210 2717265	www.smchellas.gr	sales@smchellas.gr
Hungary	☎ +36 23511390	www.smc.hu	office@smc.hu
Ireland	☎ +353 (0)14039000	www.smcpneumatics.ie	sales@smcpneumatics.ie
Italy	☎ +39 0292711	www.smcitalia.it	mailbox@smcitalia.it
Latvia	☎ +371 67817700	www.smclv.lv	info@smclv.lv
Lithuania	☎ +370 5 2308118	www.smclt.lt	info@smclt.lt
Netherlands	☎ +31 (0)205318888	www.smcpneumatics.nl	info@smcpneumatics.nl
Norway	☎ +47 67129020	www.smc-norge.no	post@smc-norge.no
Poland	☎ +48 222119600	www.smc.pl	office@smc.pl
Portugal	☎ +351 226166570	www.smc.eu	postpt@smc.smces.es
Romania	☎ +40 213205111	www.smcromania.ro	smcromania@smcromania.ro
Russia	☎ +7 8127185445	www.smc-pneumatik.ru	info@smc-pneumatik.ru
Slovakia	☎ +421 (0)413213212	www.smc.sk	office@smc.sk
Slovenia	☎ +386 (0)73885412	www.smc.si	office@smc.si
Spain	☎ +34 902184100	www.smc.eu	post@smc.smces.es
Sweden	☎ +46 (0)86031200	www.smc.nu	post@smc.nu
Switzerland	☎ +41 (0)523963131	www.smc.ch	info@smc.ch
Turkey	☎ +90 212 489 0 440	www.smcpnomatik.com.tr	info@smcpnomatik.com.tr
UK	☎ +44 (0)845 121 5122	www.smcpneumatics.co.uk	sales@smcpneumatics.co.uk

SMC CORPORATION Akihabara UDX 15F, 4-14-1, Sotokanda, Chiyoda-ku, Tokyo 101-0021, JAPAN Phone: 03-5207-8249 FAX: 03-5298-5362

1st printing TT printing TU 00 Printed in Spain

Specifications are subject to change without prior notice and any obligation on the part of the manufacturer.